Selection of Ka-Band Transponder Turnaround] Frequency Ratios

John Alexander Koukos
National Aeronautics and Space Administration
Jet Propulsion Laboratory
California Institute of Technology
Pasadena, California

I. introduction

The Consultative Committee for Space Data Systems (CCSDS) has issue.cl recommendations specifying Transponder Turn-around Frequency Ratios (TTFR) for S-band ancl X-band coherent earth-to-space and space-to-earth links. The new transponders designed for missions such as NASA/JPL Cassini include downlink and/or uplink Ka-band links in the 31.8 -32.3 GHz and 34.2 -34.7 GHz bands respectively.

This paper summarizes the reasoning behind the selection of the 749/3344 TTFR for the X_{up}/Ka_{down} two-way links and the 3597/3344 or the 3599/3344 TTFR for the X_{up}/Ka_{down} two-way links by the Advanced Transponder Development Group at JPL. The transponder multiplier (TM) 749 has already been adopted by blue recommendations 2.6.2 and 2.6.613 as part of the X and X/S-band TTFRs 749/880 and 749/240 respectively. Thus only the selection of TMs 3344 and 3597 or 3599 will be discussed here and the optimum TTFR will be selected.

II. Coherent Frequency Channels

The deep space bands, for tracking suppor t purposes, arc subdivided into 42 channels associated with a given transponder ratio. Thebasis for the determination of these channels is the S-band downlink center frequency (2295 MHz) designated to channel 14 (total of 27 channels inside the S-band downlink allocation). Adjacent channels in the S-band downlink frequency range arc spaced $\frac{10}{27}$ MHz apart, therefore a channel frequency is computed by subtracting $\frac{10}{27}$ MHz from the higher channel or adding $\frac{10}{27}$ MHz to the lower channel frequency :

$$F_{ch}(n \pm 1) = F_{ch}(n) \pm \frac{10}{27}\ MHz, \quad n = 2, \ldots, 41 \tag{1}$$

where $F_{ch}(n)$ is the frequency in MHz of channel n with 6 decimal digits accuracy (to Hz level).

Channel frequencies f_{ch} for another band arc generated by multiplying the corrc.spending S-band downlink channel frequency F_{ch} by the ratio TM/240 :

$$f_{ch}(n) = F_{ch} \times \frac{TM}{240} \qquad (2)$$

where 'I'M is the transponder multiplier factor of that frequency band as shown in Table 1 below.

Table la. Transponder Multipliers Factors

Frequency Band and Link	S Up	X Up	X Down	Ka Down *	Ka Up *	Ka Up *
TM	221	749	880	3344	3597	3599

' TM factor has not been adopted by the CCSDS yet.

Using equations (1) and (2) and the values of TMs in Table la above, a list of channel frequencies for deep space research bands S, X and Ka is generated in Table 1 b.

III. Criteria for Selection of TTFR in the Ka Band

Criterion 1: TMs that generate frequencies near the center of the Ka-band allocation should be selected. For this purpose, distances of mid-channel 21 from the center of the uplink (34450 MHz) and downlink (32050 MHz) bands are listed in Table 2 for all uplink (3563-3635) and downlink (3314-3386) I'Ms. As seen in Table 2, uplink TM 3599 and downlink TM 3348 generate the shortest distances (4.3 1 and 1.41 MHz respectively) for channel 21 from the centers of the Ka-bands.

Criterion 2 : The selection of a TTFR should provide the maximum number of channels for simultaneous coherent operation within the boundaries allocated for deep space research for the following combination of bands :

A. X band in the uplink and X and Ka bands in the downlink ;

B. X in the uplink and Ka band in the downlink.

C. Ka band in the uplink and X and Ka bands in the downlink ;

Tables 3a, 3b and 3c list all combinations of uplink versus downlink TMs that generate frequencies according to the criteria 1A, 1 B and 1 C above respectively. Each table entry contains 3 numbers, the first number is the total number of coherent channels per TTFR, the second and the third numbers are the first and the last coherent channel numbers respectively (in the sense of Table 2 channel enumeration) for the same TTFR. As shown in :

a. Table 3a, uplink TMs 3563-3635 and downlink TMs 3332-3364 form 17x37= 62.9 TTFRs with a (maximum) number of 35 coherent channels according to criterion 1 A above;

b. Table 3b, uplink TMs 3563-3635 and downlink TMs 3334-3364 form a (maximum) number of 37 coherent channels according to criterion B above; $16 \times 37 = 592$ TTFRs with

c. Table 3c, uplink TMs 3583-3611 and downlink TMs 3332-3364 form a (maximum) number of 37 coherent channels according to criterion C above. $17 \times 15 = 255$ TTFRs with

Criterion 3: The uplink factor should be an odd multiple of the base frequency and the downlink factor should be an even multiple of the base frequency to avoid feeding downlink RF spurious signals to the uplink RF channels inside the transponder or via the S/C microwave path including the S/C antennas. Similarly, the first IF should be an odd multiple of the base frequency, while the Local Oscillator (LO) should be an even multiple of the base frequency.

Criterion 4: The downlink multiplication factor is generated by cascaded "×N" multipliers in a high-to-low order multiplication chain. Each multiplier is followed by a passive bandpass filters able to reject all other than the N-th harmonic. In such case the multiplication factor N cannot be higher than 19, because the BPF cannot be made arbitrarily y narrow in order to reject all adjacent harmonics. Tables 4a,b list the prime multiplication factors for uplink and downlink TMs. The downlink TMs with prime multiplication factors ≤19 are the following :

3328, 3332, 3344, 3360, 3366, and 3380.

Of the above candidate downlink TMs only 3344 and 3360 satisfy maximum channel coherence criterion 2. However lately, usage of a Dielectric Resonator Oscillator (DRO) controlled by phase lock loop (PLL), in either single or double IF stage Advanced Transponder designs, made possible multiplication factors much higher than 19 (e.g. 73 in the Cassini Transponder), because the PLL acts as a very narrowband filter rejecting all other spurious harmonics.
The multiplier chain implementations of the chosen factors use the same downlink and first local oscillator prime factor in order to minimize the delay in the spacecraft receiver's closed loop path. If multiplication factors ≤ 19 are not found, only then different downlink and first LO factors are implemented (see Figures 1-6).

Criterion S : The chosen downlink TM should allow a maximum VCO multiplier implementation flexibility. Of the above downlink TMs, 'TM 3332 can be implemented with VCO frequencies 2F1 and 4F1, TM 3344 with 2F1, 4F1 and 8F1 and 3360 with 2F1, 4F1, 6F1, 8F1, 10F1 and 12F1, where F1 is the base frequency (e.g. F1=9542438 Hz).

Criterion 6 : An Automatic Gain Control (AGC) performance limitation requires an upper boundary of 2.5 GHz for the first IF frequency. However, an AGC implementation in a more recent Advanced Transponder design allows up to 10 GHz. Also a lower boundary of 250 MHz is necessary due to wide turnaround ranging limitations. Table 5 lists the uplink factors for a given downlink factor and specified VCO frequency.

Criterion 7 : The turnaround ratio separation should be greater than 7 % to assure a realizable diplexer and to minimize diplexer implementation losses and cost. Table 6 lists the satisfactory ratios for a specified Voltage Controlled Oscillator (VCO) frequency.

Criterion 8 : 'l'he selected downlink TMs should generate channels that avoid potential interference with the intersatellite service allocation in the 32-33 GHz band. '1'able 8 lists all downlink TMs versus the number of channels generated in the [31.8, 32] GHz band, non-overlapping with the intersatellite service allocation. As shown in Table 7, downlink 'I'M 3332 generates a maximum number of 39 channels in the Ka-band downlink allocation below 32 GHz, TM 3328 generates 33 and TM 3344 generates 18 such channels. All the other candidate downlink "I'M (3360, 3366 and 3380) channels do interfere with the intersatellite band, [Ref. 3].

Criterion 9: If Differential One-Way Ranging (DOR) tones arc part of the spacecraft downlink signaling scheme, then a downlink "I'M is selected so that the downlink carrier together with the DOR tones fall within the Ka-band deep space allocation. For example, if a maximum DOR tone generation capability of ± 100 MHz from the carrier is required, then the available downlink frequency range is reduced to 31.9 -32.2 GHz. In this case downlink TM 3332 can only be implemented for channels 22-37, TM 3344 for channels 5-37 and 3360 for channels 5-28, [Ref. 2].

IV. Proposed Frequency Schemes

Next a series of Transponder Frequency Schematics illustrates the merits of the investigated TTFRs 3597/3344, 3599/3344 and 74913344, [Ref. 4].

Figures 1-6 show Ka-Up/Ka-Down frequency schemes, implemented with Cascaded **Multipliers** ≤19, for the 3s9'7/3344 and 3599/3344 TTFRs,using criteria 2 and 3. The TMs used for uplink, downlink, first Local Oscillator (LO), and first 11: arc listed in Tables 8 a,b. VCO frequencies used are 2F1, 4F1 and 8F1.

Figures 7-12 show Ka-band transponder implementations using **DROs**.

Specifically, Figure 7 implementation has a TTFR=3599/3344, with double conversion, Ka- and S-band DROs and Ka-band Phase Modulator (I'M). Both receiver DROS arc phase-locked from the 12F 1 Voltage Controlled Crystall Oscillator (V CXO). The receiver fixed frequency oscillator is 2F2, in the coherent mode and 12F0 in the non-coherent mode.

In Figure 8, TTFR = 3599/3344, with single conversion, a Ka-band DRO and Ka-band PM. The DRO is phased locked from the 121:1 and the receiver fixed frequency oscillator is 2F2. The non-coherent mode uses a 12F0 oscillator. "l'his design can also be implemented for the 3597/3344 TTFR.

In Figure 9, TTFR = 3597/3344, with double conversion, a Ka-band and S-band DROs, and a Ka-band PM. Both DROs arc phase-locked from the 11 F 1 , and the receiver fixed frequency reference oscillator is 2F2. The non-coherent DRO is locked to a 11 F0 oscillator. The 111:1 and 111:0 oscillators are used to reduce the complexity of LO and non-coherent carrier generation circuitry.

In Figure 10, TTFR = 3597/3344, with single conversion , a Ka-band DRO and a Ka-band PM. The DRO is phase-locked from the 111:1 , and the receiver fixed frequency reference oscillator

is 2F2 for the coherent mode. The non-coherent mode uses a 11F0 oscillator.

Notice that the dual conversion designs (Fig 7, 9) require two LO loops in the receiver and are more complex than the single conversion designs. The two single conversion designs (Fig 8, 10) require tighter filtering but only one LO loop.

Figure 11 depicts a DRO implementation of X/Ka band Reduced Function Transponder, TTFR = 749/3344, featuring double conversion with a UHF Coaxial Resonator Oscillator (CRO), and an X-band PM. The CRO is phase-locked from a 12F1, and the reference oscillator is 2F2. Since the downlink "TM 3344 is also an integer multiple of 11, the use of 111~0 oscillator reduces the complexity of the non-coherent carrier generation circuitry. The design eliminates a Ka-band DRO and other loop components to reduce complexity, size, mass, power and cost.

Finally, Figure 12 illustrates the usage of DROs in the design of an X-band Transponder upgrade with two Ka-band front end modules heterodyning the uplink from 35991:1 to 749F1 and the downlink from 880F1 to 3344F1. The X-band module features a double conversion, with an X-band DRO and an L-band Surface acoustic wave Resonator Oscillator (SRO).

V. Conclusions

TTFR 3599/3344 is the desired choice because :

1. For uplink 'TM 3599 the distance of mid-channel 21 from the center of the uplink band (34.45 GHz) is the shortest = 4.31 MHz. For downlink TM 3344 the distance of mid-channel 21 from the center of the downlink band (32.05 GHz) is the fourth shortest = 36.87 MHz (Criterion 1).

2. Provides a maximum number of coherent channels (Criterion 2).

3. TM 3599 is an odd number and TM 3344 is an even number (Criterion 3).

4. TM 3344 allows implementations with cascaded multipliers because it contains factors ≤ 19:3344 = 2 x2x2 x2 x 11 x 19 and 3599-3344 = 255 = 3 x5 x 17. Also DRO implementations are possible at a greater cost (Criterion 4).

5. TM 3344 allows VCO implementation with frequencies 2F1, 4F1 and 8F1 (Criterion 5).

6. Allows AGC implementations with VCO frequencies 2F1, 4F1 and 8F1 (Criterion 6).

7. Turnaround Ratio Separation = $\frac{3599-3344}{3599}$ = 14.11% > 7% (Criterion 7)

8. TM 3344 creates 18 channels non-interfering with the intersatellite band (Criterion 8).

9. TM 3344 creates 33 channels that contain 100 MHz DOR tones inside the downlink Ka-band allocation (Criterion 9).

VI. Acknowledgment

I wish to acknowledge the contributions of F. Davarian, D. Bishop (JPL Telecommunications Systems Section 339) and A. Kermode, N. Mysoor, E. Watson, C. Kyriakou, J. lane (Spacecraft Telecommunications Equipment Section 336), in putting together this paper.

The research dcscribcd in this paper was carried out by the Jet Propulsion Laboratory, California Institute of Technology, under contract with the National Aeronautics and Space Administration.

WI. References

1. N. R. Mysoor, J. D. Perret, and A. W. Kermode, "An X-Band Spacecraft Transponder for Deep Space Applications - Design Concepts and Breadboard Performance," IEEE Trans. Microwave Theory Tech., vol MTT-40, no. 6, pp. 1192.-1198, June 1992.

2. R. Y, Watson and A. W. Kermode, "Transponder Implementation of Channel Plan Frequency Turnaround Ratio", IOM 336-90-210, December 19, 1992.

3. D. F. Bishop, "Turnaround Ratios for Deep Space Network Systems at Ka-Band," JPL IOM 3396-90-89, November 19, 1990.

4. Advanced Transponder Development/FY 92 End Year Report, JPL 1)-10515.

24-Aug-93 J. A. KOUKOS

TABLE 1b : DSN CHANNEL FREQUENCIES IN THE S, X AND Ka BANDS

TM => CHANNEL #	S-Band Up 221	S-Band Down, MHz 240	X-Band UD, MHz 749	X-Band Down, MHz 880	Ka-Band Down, MHz 3344	Ka-Band UD, MHz 3597	Ka-Band Up, MHz 3599	Ka-Band Up, MHz 3583	Ka-Band Down, MHz 3332
1		2290.185185	7147.286265	8397.365679	31909.913580	34324.150463	34343.235340	34190.556327	31795.404321
2		2290.555556	7148.442130	8398. 703704	31915.074074	34329.701389	34368.789352	34196.085648	31800.546296
3		2290.925926	7149.597994	8400.061728	31920.234568	34335.252315	34354.343364	34201.674969	37895.688272
4		2291.296296	7150.753858	8407.419753	31925.395062	34360. 80324?	34359.897377	34207. 144290	31810.830247
5	2110.243056	2291.666667	7151.909722	8402.777778	31930.555556	34346.354167	34365.451389	34212.673611	31815.972222
6	21? O.5W1O5	2292.037037	7153.065586	8404.135802	31935.716049	34351.905093	34377.005401	34218.202932	31821 .1?4198
7	2110.925154	2292.407407	7154.221451	8405.493827	31940.876543	34357 .4560?9	34376.559414	34223.732253	31826.256173
8	2111.266204	2292.777778	7755.377315	8406.85? 552	31946.037037	34363.006944	34382.113426	34229 .26? 574	31831.398148
9	2111.607253	2293.148148	7156.533179	8408.209877	37951.197537	34368.557870	34387.667438	34234.790895	31836.540123
10	2111.948302	2293.518519	7157.689043	8409.567901	31956.358025	34374.108796	34393.221451	34240.320216	3'841.6820$$
11	2112.289352	2293.888889	7158.844907	8410.925926	31961.518519	34379.659722	34398.775463	34245.849537	31846.824074
12	2112.630401	2294.259259	7160.000772	8412.283951	31966.679012	34385.210648	34404.329475	34251 .378858	31851.966049
13	2112.971451	229.4.629630	7161.156636	8413.647975	31971 .839506	34390.76'574	34409.883488	34256 .908?79	31857.108025
14	2113.312500	2295.000009	7162.312500	8415.000000	31977.000000	34396.312500	34415.437500	34262.437500	31862.250000
15	2113.653549	2295.370370	7163.468364	8416.358025	31982-160494	3440'.863426	34420.991512	34267.96682?	3'867.39"975
16	2'?3. $94599	2295.74074:	7?64.624228	8417.716049	31987.320988	34407.414352	34426.545525	34273.496142	3'872.53395'
17	2114.335648	2296.111111	7165.780093	8419.074074	31992.481481	34672.965278	36432. 0W537	34279.025463	3'877.675926
18	2114.676698	2296.481481	7766.935957	8420.432999	31997.641975	34418.516204	34437.653549	34284.554784	3'882.8"795'
?9	2115.017747	2296.851852	7168.091821	8421.790123	3200 2.852469	36424 .067?30	34443.207562	34290 .084105	31887.959877
20	2115.358796	2297.222222	7769.247685	8423.148148	32097.962963	34429.618056	34448.761574	34295.613426	31893.101852
21	2115.699846	2297.592593	7170.403549	8424.506773	32013.123457	34435.168981	34454.315586	34301.142747	3"898.243827
22	2116.040895	2297.962963	7171.559414	8425.864198	32018.283951	34440.719907	34459.869599	34306. 672068	31903.385802
23	2776.387944	2298.333333	7172.715278	8427.222222	32023.444444	34446.270833	34465.423611	343'2.201389	3'998.527778
24	2116.722994	2298.703704	7173.871142	8428.589247	32028.634938	34451.827759	34475.977623	34317.730710	3'9?3.659753
25	2117.064043	2299.074074	7175.027006	8429.938272	32033.765432	34457.372685	34476.531636	34323.260031	3?918.81'728
26	2'17.405093	2299.444444	7176.182870	8437.296296	32038.925926	34462.923611	34482.085648	34328.789352	31923.953704
27	2117.746142	2299.814815	7177.338735	8432.654321	32044.086420	34468.476537	34487.639660	34334.318673	31929.095679
28	2118.087191	2300.185185	7178.694599	8L34.072346	32049.246914	34474.025463	34493.193673	34339.8479%	31934.237654
29	2118.428241	2300.555556	7179.650463	8435.370370	32054.407407	34479.576389	34498.747685	34345 .3773?5	31939.379630
30	2118.769290	2300.925926	7180.806327	8436.728395	32059.56790?	34485.127315	34504.301698	34350.906636	3'944.52?625
3"	2119.110340	2301.296296	7181.962191	8438. 086420	320$4.728395	34490.678241	34509.8557'0	34356.435957	31949.663580
32	2119.451389	2301-666667	7183.118056	8439.444444	32069.888889	34496.229167	34515.409722	34367.965278	3'954.825556
33	2119.792438	2392. 037037	7184.273920	8440.802469	32075.249383	34591.780093	34529.963735	34367.494599	3'959.94753.
34		2302.407407	7185.429784	8442 .'60494	32080.209877	3L507.331O?9	34526.517747	34373.023920	31965.089506
35		2392.777778	7"86.585648	8443.5 8519	32085.370370	34512.881944	34532 .97'759	34378.553241	3"975.23"48"
36		2303.148148	7'87.74'5"2	8444.876543	32090.530864	345'8.432870	34537.625772	34384.982562	31975.373457
37		2303.518519	7188.897377	8446.234568	32095.691358	34523.983796	34543.179784	34389.67'883	31980.515432
38		2303.888889	7190.053241	8447.592593	32100.851852	34529.534722	34548.733796	34395 ."4"294	31985.657407
39		2304.259259	7191.209105	8448.950617	32106.012346	34535.085648	34554.287809	34400.670525	31990.799383
40		2354-629635	7192.364969	8450.308642	32111 .172840	34549.636574	34559.841821	34406."99846	3'995.94"35?
41		2305.000005	7193.520833	8451.666667	32116.333333	34546.187500	34565.395833	34412.729167	32001.283333
42		2305.370370	7196.676698	8453.024691	32121.693827	34551.738426	34570.949846	34417.258488	32006.225309
Deep-	2110	2290	7145	8400	31800	34200	34200	34200	31800
Alloc	2120	2300	7190	8450	32300	34700	34700	34700	32300
Near	2025	2200	7?90	8450	32000 <== intersatel [ite		------>		32000
Alloc	2110	2290	7235	8500	33000	service			33000

Table 2: Mid Channel 21 Distance in MHz from the Center of Ka-Band versus Transponder Multiplier (TM).

U/L TM	Distance, MHz	U/L TM	Distance, MHz	D/L TM	Distance, MHz	D/L TM	Distance, MHz
3563	-340.324	3601	23.4609	3314	-324.076	3352	39.709
3565	-321.176	3603	42.6094	3316	-304.93	3354	58.8555
3567	-302.031	3605	61.7539	3318	-285.783	3356	78.002
3569	-282.887	3607	80.9023	3320	-266.637	3358	97.1484
3571	-263.738	3609	100.0469	3322	-247.49	3360	116.295
3573	-244.59	3611	119 .195	3324	-228.344	3362	1.35.441.
3575	-225.445	3613	2.38.34	3326	-209.195	3364	154.59
3577	-206.297	3615	157.488	332S	-190.051	3366	173.736
3579	-187.152	3617	176.633	3330	-170.904	3368	192 .881
3581	-168.004	3619	195.781	3332	-151.756	3370	212.029
3583	-148.859	3621	214.926	3334	-132.611	3372	231.176
3585	-129.711	3623	234.074	3336	-113.465	3374	250.32
3587	-110.566	3625	253.223	3338	-94.3164	3376	269.469
3589	-91.418	3627	272.367	3340	-75.1699	3378	288.615
3591	-72.2695	3629	291.516	3342	-56.0254	3380	307.76
3593	-53.125	3631	310.66	3344	-36.877	3382	326.908
3595	-33.9805	3633	329.805	3346	-17 .7305	3384	346.055
3597	-14.832	3635	3.48.953	3348	1.41602	3386	365.201
3599	4.31641			3350	20.5625		

30-Jul-93 J. A. Koukos

Table 3a : X-up/X, Ka down

downlink\uplink	3563			3565			3567			3569			3571			3573			3575			3577			3579		
3314	2	36	37	2	36	37	2	36	37	2	36	37	2	36	37	2	36	37	2	36	37	2	36	37	2	36	37
3316	6	32	37	6	32	37	6	32	37	6	32	37	6	32	37	6	32	37	6	32	37	6	32	37	6	32	37
3318	10	28	37	10	28	37	10	28	37	10	28	37	10	28	37	10	28	37	10	28	37	10	28	37	10	28	37
3320	13	25	37	13	25	37	13	25	37	13	25	37	13	25	37	13	25	37	13	25	37	13	25	37	13	25	37
3322	17	21	37	17	21	37	17	21	37	17	21	37	17	21	37	17	21	37	17	21	37	17	21	37	17	21	37
3324	21	17	37	21	17	37	21	17	37	21	17	37	21	17	37	21	17	37	21	17	37	21	17	37	21	17	37
3326	24	14	37	24	14	37	24	14	37	24	14	37	24	14	37	24	14	37	24	14	37	24	14	37	24	14	37
3328	28	10	37	28	10	37	28	10	37	28	10	37	28	10	37	28	10	37	28	10	37	28	10	37	28	10	37
3330	32	6	37	32	6	37	32	6	37	32	6	37	32	6	37	32	6	37	32	6	37	32	6	37	32	6	37
3332	35	3	37	35	3	37	35	3	37	35	3	37	35	3	37	35	3	37	35	3	37	35	3	37	35	3	37
3334	35	3	37	35	3	37	35	3	37	35	3	37	35	3	37	35	3	37	35	3	37	35	3	37	35	3	37
3336	35	3	37	35	3	37	35	3	37	35	3	37	35	3	37	35	3	37	35	3	37	35	3	37	35	3	37
3338	35	3	37	35	3	37	35	3	37	35	3	37	35	3	37	35	3	37	35	3	37	35	3	37	35	3	37
3340	35	3	37	35	3	37	35	3	37	35	3	37	35	3	37	35	3	37	35	3	37	35	3	37	35	3	37
3342	35	3	37	35	3	37	35	3	37	35	3	37	35	3	37	35	3	37	35	3	37	35	3	37	35	3	37
3344	35	3	37	35	3	37	35	3	37	35	3	37	35	3	37	35	3	37	35	3	37	35	3	37	35	3	37
3346	35	3	37	35	3	37	35	3	37	35	3	37	35	3	37	35	3	37	35	3	37	35	3	37	35	3	37
3348	35	3	37	35	3	37	35	3	37	35	3	37	35	3	37	35	3	37	35	3	37	35	3	37	35	3	37
3350	35	3	37	35	3	37	35	3	37	35	3	37	35	3	37	35	3	37	35	3	37	35	3	37	35	3	37
3352	35	3	37	35	3	37	35	3	37	35	3	37	35	3	37	35	3	37	35	3	37	35	3	37	35	3	37
3354	35	3	37	35	3	37	35	3	37	35	3	37	35	3	37	35	3	37	35	3	37	35	3	37	35	3	37
3356	35	3	37	35	3	37	35	3	37	35	3	37	35	3	37	35	3	37	35	3	37	35	3	37	35	3	37
3358	35	3	37	35	3	37	35	3	37	35	3	37	35	3	37	35	3	37	35	3	37	35	3	37	35	3	37
3360	35	3	37	35	3	37	35	3	37	35	3	37	35	3	37	35	3	37	35	3	37	35	3	37	35	3	37
3362	35	3	37	35	3	37	35	3	37	35	3	37	35	3	37	35	3	37	35	3	37	35	3	37	35	3	37
3364	35	3	37	35	3	37	35	3	37	35	3	37	35	3	37	35	3	37	35	3	37	35	3	37	35	3	37
3366	33	3	35	33	3	35	33	3	35	33	3	35	33	3	35	33	3	35	33	3	35	33	3	35	33	3	35
3368	29	3	31	29	3	31	29	3	31	29	3	31	29	3	31	29	3	31	29	3	31	29	3	31	29	3	31
3370	26	3	28	26	3	28	26	3	28	26	3	28	26	3	28	26	3	28	26	3	28	26	3	28	26	3	28
3372	22	3	24	22	3	24	22	3	24	22	3	24	22	3	24	22	3	24	22	3	24	22	3	24	22	3	24
3374	18	3	20	18	3	20	18	3	20	18	3	20	18	3	20	18	3	20	18	3	20	18	3	20	18	3	20
3376	15	3	17	15	3	17	15	3	17	15	3	17	15	3	17	15	3	17	15	3	17	15	3	17	15	3	17
3378	11	3	13	11	3	13	11	3	13	11	3	13	11	3	13	11	3	13	11	3	13	11	3	13	11	3	13
3389	7	3	9	7	3	9	7	3	9	7	3	9	7	3	9	7	3	9	7	3	9	7	3	9	7	3	9
3382	4	3	6	4	3	6	4	3	6	4	3	6	4	3	6	4	3	6	4	3	6	4	3	6	4	3	6
3384	0	0	0	0	0	0	0	0	0	0	0	0	0	0	0	0	0	0	0	0	0	0	0	0	0	0	0
3386	0	0	0	0	0	0	0	0	0	0	0	0	0	0	0	0	0	0	0	0	0	0	0	0	0	0	0

Table 3a : X-up/X, Kadown(cont)

downlink\uplink	3581			3583			3585			3587			3589			3591			3593			3595			3597		
3314	2	36	37	2	36	37	2	36	37	2	36	37	2	36	37	2	36	37	2	36	37	2	36	37	2	36	37
3316	6	32	37	6	32	37	6	32	37	6	32	37	6	32	37	6	32	37	6	32	37	6	32	37	6	32	37
3318	10	28	37	10	28	37	10	28	37	10	28	37	10	28	37	10	28	37	10	28	37	10	28	37	10	28	37
3320	13	25	37	13	25	37	13	25	37	13	25	37	13	25	37	13	25	37	13	25	37	13	25	37	13	25	37
3322	17	21	37	17	21	37	17	2?	37	17	21	37	17	21	37	17	21	37	17	21	37	17	21	37	17	21	37
3324	21	17	37	21	17	37	21	?7	37	21	17	37	21	17	37	21	17	37	21	17	37	21	17	37	21	17	37
3326	24	14	37	24	14	37	24	14	37	24	14	37	24	14	37	24	14	37	24	14	37	24	14	37	24	14	37
3328	28	10	37	28	10	37	28	10	37	28	10	37	28	10	37	28	10	37	28	10	37	28	10	37	28	10	37
3330	32	6	37	32	6	37	32	6	37	32	6	37	32	6	37	32	6	37	32	6	37	32	6	37	32	6	37
3332	35	3	37	35	3	37	35	3	37	35	3	37	35	3	37	35	3	37	35	3	37	35	3	37	35	3	37
3334	35	3	37	35	3	37	35	3	37	35	3	37	35	3	37	35	3	37	35	3	37	35	3	37	35	3	37
3336	35	3	37	35	3	37	35	3	37	35	3	37	35	3	37	35	3	37	35	3	37	35	3	37	35	3	37
3338	35	3	37	35	3	37	35	3	37	35	3	37	35	3	37	35	3	37	35	3	37	35	3	37	35	3	37
3340	35	3	37	35	3	37	35	3	37	35	3	37	35	3	37	35	3	37	35	3	37	35	3	37	35	3	37
3342	35	3	37	35	3	37	35	3	37	35	3	37	35	3	37	35	3	37	35	3	37	35	3	37	35	3	37
3344	35	3	37	35	3	37	35	3	37	35	3	37	35	3	37	35	3	37	35	3	37	35	3	37	35	3	37
3346	35	3	37	35	3	37	35	3	37	35	3	37	35	3	37	35	3	37	35	3	37	35	3	37	35	3	37
3348	35	3	37	35	3	37	35	3	37	35	3	37	35	3	37	35	3	37	35	3	37	35	3	37	35	3	37
3350	35	3	37	35	3	37	35	3	37	35	3	37	35	3	37	35	3	37	35	3	37	35	3	37	35	3	37
3352	35	3	37	35	3	37	35	3	37	35	3	37	35	3	37	35	3	37	35	3	37	35	3	37	35	3	37
3354	35	3	37	35	3	37	35	3	37	35	3	37	35	3	37	35	3	37	35	3	37	35	3	37	35	3	37
3356	35	3	37	35	3	37	35	3	37	35	3	37	35	3	37	35	3	37	35	3	37	35	3	37	35	3	37
3358	35	3	37	35	3	37	35	3	37	35	3	37	35	3	37	35	3	37	35	3	37	35	3	37	35	3	37
3360	35	3	37	35	3	37	35	3	37	35	3	37	35	3	37	35	3	37	35	3	37	35	3	37	35	3	37
3362	35	3	37	35	3	37	35	3	37	35	3	37	35	3	37	35	3	37	35	3	37	35	3	37	35	3	37
3364	35	3	37	35	3	37	35	3	37	35	3	37	35	3	37	35	3	37	35	3	37	35	3	37	35	3	37
3366	33	3	35	33	3	35	33	3	35	33	3	35	33	3	35	33	3	35	33	3	35	33	3	35	33	3	35
3368	29	3	31	29	3	31	29	3	31	29	3	31	29	3	31	29	3	31	29	3	31	29	3	31	29	3	31
3370	26	3	28	26	3	28	26	3	28	26	3	28	26	3	28	26	3	28	26	3	28	26	3	28	26	3	28
3372	22	3	24	22	3	24	22	3	24	22	3	24	22	3	24	22	3	24	22	3	24	22	3	24	22	3	24
3374	18	3	20	18	3	20	?8	3	20	18	3	20	18	3	20	18	3	20	18	3	20	18	3	20	18	3	20
3376	15	3	17	?5	3	17	15	3	17	15	3	17	15	3	17	15	3	17	15	3	17	?5	3	17	15	3	17
3378	1?	3	13	11	3	?3	11	3	13	11	3	13	11	3	13	11	3	?3	11	3	13	11	3	13	11	3	13
3380	7	3	9	7	3	9	7	3	9	7	3	9	7	3	9	7	3	9	7	3	9	7	3	9	7	3	9
3382	4	3	6	4	3	6	4	3	6	4	3	6	4	3	6	4	3	6	4	3	6	4	3	6,	4	3	6
3384	O	0	0	0	0	o	0	0	0	0	0	0	0	0	0	0	0	0	0	0	0	0	0	0	0	0	0
3386	10	0	0	0	0	0	0	0	0	0	0	0	0	0	0	0	0	0	0	0	0	0	0	0	0	0	0

Table 3a : X-up/X, Ka down (cont)

downlink\uplink	35W			3601			3603			3605			3607			3609			361?			36?3			3615		
3314	2	36	37	2	36	37	2	36	37	2	36	37	2	36	37	2	36	37	2	36	37	2	3 6	3 7	2	36	37
3316	6	32	37	6	32	37	6	32	37	6	32	37	6	32	37	6	32	37	6	32	37	6	32	37	6	32	37
3318	10	28	37	10	28	37	10	28	37	10	28	37	10	28	37	10	28	37	'o	28	37	4	28	37	10	28	37
3320	13	25	37	13	25	37	13	25	37	13	25	37	13	25	37	13	25	37	"3	25	37	13	25	37	13	25	37
3322	17	21	37	17	21	37	?7	21	37	17	21	37	17	21	37	17	21	37	'7	21	37	17	21	37	17	21	3 7
3324	2"	17	37	21	17	37	21	17	37	21	17	37	21	17	37	21	17	37	21	17	37	21	17	37	21	17	37
3326	24	14	37	24	14	37	24	14	37	24	14	37	24	14	37	24	14	37	24	14	37	24	14	37	24	14	37
3328	28	10	37	28	10	37	28	10	37	28	'o	37	28	10	37	28	10	37	28	10	37	28	10	37	28	10	37
3330	32	6	37	32	6	37	32	6	37	32	6	37	32	6	"37	32	6	37	32	6	37	32	6	37	32	6	37
3332	35	3	37	35	3	37	35	3	37	35	3	37	35	3	37	35	3	37	35	3	37	35	3	37	35	3	37
3334	35	3	37	35	3	37	35	3	37	35	3	37	35	3	37	35	3	37	35	3	37	35	3	37	35	3	37
3336	35	3	37	35	3	37	35	3	37	35	3	37	35	3	37	35	3	37	35	3	37	35	3	37	35	3	37
3338	35	3	37	35	3	37	35	3	37	35	3	37	35	3	37	35	3	37	35	3	37	35	3	37	35	3	3 7
3340	35	3	37	35	3	37	35	3	37	35	3	37	35	3	37	35	3	37	35	3	37	35	3	37	35	3	3 7
3342	35	3	37	35	3	37	35	3	37	35	3	37	35	3	37	35	3	37	35	3	37	35	3	37	35	3	37
3344	35	3	37	35	3	37	35	3	37	35	3	37	35	3	37	35	3	37	35	3	37	35	3	37	35	3	37
3346	35	3	37	35	3	37	35	3	37	35	3	37	35	3	37	35	3	37	35	3	37	35	3	37	35	3	37
3348	35	3	37	35	3	37	35	3	37	35	3	37	35	3	37	35	3	37	35	3	37	35	3	37	35	3	3 7
3350	35	3	37	35	3	37	35	3	37	35	3	37	35	3	37	35	3	37	35	3	37	35	3	37	35	3	37
3352	35	3	37	35	3	37	35	3	37	35	3	37	35	3	37	35	3	37	35	3	37	35	3	37	35	3	37
3354	35	3	37	35	3	37	35	3	37	35	3	37	35	3	37	35	3	37	35	3	37	35	3	37	35	3	3 7
3356	35	3	37	35	3	37	35	3	37	35	3	37	35	3	37	35	3	37	35	3	37	35	3	37	35	3	37
3358	35	3	37	35	3	37	35	3	37	35	3	37	35	3	37	35	3	37	35	3	37	35	3	37	35	3	37
3360	35	3	37	35	3	37	35	3	37	35	3	37	35	3	37	35	3	37	35	3	37	35	3	37	35	3	37
3362	35	3	37	35	3	37	35	3	37	35	3	37	35	3	37	35	3	37	35	3	37	35	3	37	35	3	3 7
3364	35	3	37	35	3	37	35	3	37	35	3	37	35	3	37	35	3	37	35	3	37	35	3	37	35	3	37
3366	33	3	35	33	3	35	33	3	35	33	3	35	33	3	35	33	3	35	33	3	35	33	3	35	33	3	35
3368	29	3	31	29	3	31	29	3	31	29	3	31	29	3	31	29	3	31	29	3	31	29	3	3'	29	3	31
3370	26	3	28	26	3	28	26	3	28	26	3	28	26	3	28	26	3	28	26	3	28	26	3	28	26	3	28
3372	22	3	24	22	3	24	22	3	24	22	3	24	22	3	24	22	3	24	22	3	24	22	3	24	22	3	24
3374	18	3	20	18	3	20	18	3	20	18	3	20	18	3	20	18	3	20	18	3	20	18	3	20	18	3	20
3376	15	3	17	15	3	17	15	3	17	15	3	17	15	3	17	'5	3	17	15	3	17	15	3	?7	15	3	17
3378	11	3	13	11	3	13	11	3	13	11	3	13	11	3	13	11	3	13	11	3	13	11	3	13	11	3	"3
3380	7	3	9	7	3	9	7	3	9	7	3	9	7	3	9	7	3	9	7	3	9	7	3	9.	7	3	9
3382	4	3	6	4	3	6	4	3	6	4	3	6	4	3	6	4	3	6	4	3	6	4	3	6	4	3	6
3384	0	0	0	0	0	o	0	0	o	0	0	0	0	0	o	0	0	0	0	0	0	0	0	0	0	0	0
3336	0	0	0	n	0	0	0	0	0	0	0	0	o	0	0	0	0	0	0	0	0	0	0	0	n	0	0

Table 3a : X-up/X, Ka down (cont)

dnlink\uplink	3617			3619			3621			3623			3625			3627			3629			3631			3633			3635		
3314	2	36	37	2	36	37	2	36	37	2	36	37	2	36	37	2	36	37	2	36	37	2	36	37	2	36	37	2	36	37
3316	6	32	37	6	32	37	6	32	37	6	32	37	6	32	37	6	32	37	6	32	37	6	32	37	6	32	37	6	32	37
3318	10	28	37	10	28	37	10	28	37	10	28	37	10	28	37	10	28	37	10	28	37	10	28	37	10	28	37	10	28	37
3320	13	25	37	13	25	37	13	25	37	13	25	37	13	25	37	13	25	37	13	25	37	13	25	37	13	25	37	13	25	37
3322	17	21	37	17	21	37	17	21	37	17	21	37	17	21	37	17	21	37	17	21	37	17	21	37	17	21	37	17	21	37
3324	21	17	37	21	17	37	21	17	37	21	17	37	21	17	37	21	17	37	21	17	37	21	17	37	21	17	37	21	17	37
3326	24	14	37	24	14	37	24	14	37	24	14	37	24	14	37	24	14	37	24	14	37	24	14	37	24	14	37	24	14	37
3328	28	10	37	28	10	37	28	10	37	28	10	37	28	10	37	28	10	37	28	10	37	28	10	37	28	10	37	28	10	37
3330	32	6	37	32	6	37	32	6	37	32	6	37	32	6	37	32	6	37	32	6	37	32	6	37	32	6	37	32	6	37
3332	35	3	37	35	3	37	35	3	37	35	3	37	35	3	37	35	3	37	35	3	37	35	3	37	35	3	37	35	3	37
3334	35	3	37	35	3	37	35	3	37	35	3	37	35	3	37	35	3	37	35	3	37	35	3	37	35	3	37	35	3	37
3336	35	3	37	35	3	37	35	3	37	35	3	37	35	3	37	35	3	37	35	3	37	35	3	37	35	3	37	35	3	37
3338	35	3	37	35	3	37	35	3	37	35	3	37	35	3	37	35	3	37	35	3	37	35	3	37	35	3	37	35	3	37
3340	35	3	37	35	3	37	35	3	37	35	3	37	35	3	37	35	3	37	35	3	37	35	3	37	35	3	37	35	3	37
3342	35	3	37	35	3	37	35	3	37	35	3	37	35	3	37	35	3	37	35	3	37	35	3	37	35	3	37	35	3	37
3344	35	3	37	35	3	37	35	3	37	35	3	37	35	3	37	35	3	37	35	3	37	35	3	37	35	3	37	35	3	37
3346	35	3	37	35	3	37	35	3	37	35	3	37	35	3	37	35	3	37	35	3	37	35	3	37	35	3	37	35	3	37
3348	35	3	37	35	3	37	35	3	37	35	3	37	35	3	37	35	3	37	35	3	37	35	3	37	35	3	37	35	3	37
3350	35	3	37	35	3	37	35	3	37	35	3	37	35	3	37	35	3	37	35	3	37	35	3	37	35	3	37	35	3	37
3352	35	3	37	35	3	37	35	3	37	35	3	37	35	3	37	35	3	37	35	3	37	35	3	37	35	3	37	35	3	37
3354	35	3	37	35	3	37	35	3	37	35	3	37	35	3	37	35	3	37	35	3	37	35	3	37	35	3	37	35	3	37
3356	35	3	37	35	3	37	35	3	37	35	3	37	35	3	37	35	3	37	35	3	37	35	3	37	35	3	37	35	3	37
3358	35	3	37	35	3	37	35	3	37	35	3	37	35	3	37	35	3	37	35	3	37	35	3	37	35	3	37	35	3	37
3360	35	3	37	35	3	37	35	3	37	35	3	37	35	3	37	35	3	37	35	3	37	35	3	37	35	3	37	35	3	37
3362	35	3	37	35	3	37	35	3	37	35	3	37	35	3	37	35	3	37	35	3	37	35	3	37	35	3	37	35	3	37
3364	35	3	37	35	3	37	35	3	37	35	3	37	35	3	37	35	3	37	35	3	37	35	3	37	35	3	37	35	3	37
3366	33	3	35	33	3	35	33	3	35	33	3	35	33	3	35	33	3	35	33	3	35	33	3	35	33	3	35	33	3	35
3368	29	3	31	29	3	31	29	3	31	29	3	31	29	3	31	29	3	31	29	3	31	29	3	31	29	3	31	29	3	31
3370	26	3	28	26	3	28	26	3	28	26	3	28	26	3	28	26	3	28	26	3	28	26	3	28	26	3	28	26	3	28
3372	22	3	24	22	3	24	22	3	24	22	3	24	22	3	24	22	3	24	22	3	24	22	3	24	22	3	24	22	3	24
3374	18	3	20	18	3	20	18	3	20	18	3	20	18	3	20	18	3	20	18	3	20	18	3	20	18	3	20	18	3	20
3376	15	3	17	15	3	17	15	3	17	15	3	17	15	3	17	15	3	17	15	3	17	15	3	17	15	3	17	15	3	17
3378	11	3	13	11	3	13	11	3	13	11	3	13	11	3	13	11	3	13	11	3	13	11	3	13	11	3	13	11	3	13
3380	7	3	9	7	3	9	7	3	9	7	3	9	7	3	9	7	3	9	7	3	9	7	3	9	7	3	9	7	3	9
3382	4	3	6	4	3	6	4	3	6	4	3	6	4	3	6	4	3	6	4	3	6	4	3	6	4	3	6	4	3	6
3384	0	0	0	0	0	0	0	0	0	0	0	0	0	0	0	0	0	0	0	0	0	0	0	0	0	0	0	0	0	0
3386	0	0	0	0	0	0	0	0	0	0	0	0	0	0	0	0	0	0	0	0	0	0	0	0	0	0	0	0	0	0

30-Jul-93 J. A. Koukos

Table 3b : Ka-up / Ka-down Coherency Test :

'down! ink\uplink	3563			3565			3567			3569			3571			3573			3575			3 5 7 7			3579		
3314	2	36	37	2	36	37	2	36	37	2	36	37	2	36	37	2	36	37	2	36	37	2	36	37	2	36	37
3316	6	32	37	6	32	37	6	32	37	6	32	37	6	32	37	6	32	37	6	32	37	6	32	37	6	32	37
3328	10	28	37	10	28	37	10	28	37	"o	28	37	10	28	37	10	28	37	?0	28	37	10	28	37	10	28	37
3329	?3	25	37	13	25	37	13	25	37	13	25	37	13	25	37	13	25	37	13	25	37	13	25	37	13	25	37
3322	17	21	37	?7	21	37	17	21	37	17	21	37	17	21	37	17	21	37	17	21	37	17	21	37	17	21	37
3324	21	17	37	21	17	37	21	17	37	21	17	37	21	17	37	21	17	37	21	17	37	21	17	37	21	17	37
3326	24	14	37	24	14	37	24	14	37	24	14	37	24	14	37	24	14	37	24	14	37	24	14	37	24	14	37
3328	28	10	37	28	10	37	28	10	37	28	10	37	28	10	37	28	10	37	28	10	37	28	10	37	28	'o	37
333C	32	6	37	32	6	37	32	6	37	32	6	37	32	6	37	32	6	37	32	6	37	32	6	37	32	6	3 7
3332	36	2	37	36	2	37	36	2	37	36	2	37	36	2	37	36	.2	37	36	2	37	36	2	37	36	2	37
3334	37	1	37	37	1	37	37	1	37	37	1	37	37	1	37	37	1	37	37	1	37	37	1	37	37	1	37
3336	37	1	37	37	1	37	37	1	37	37	1	37	37		37	37	1	37	37	1	37	37	1	37	37	1	37
3338	37	1	37	37	1	37	37	1	37	37	1	37	37	1	37	37	1	37	37	1	37	37	1	37	37		37
3340	37	1	37	37	1	37	37	1	37	37	1	37	37	1	37	37	1	37	37	1	37	37	1	37	37		37
3342	37	1	37	37	1	37	37	1	37	37	1	37	37	1	37	37	1	37	37	1	37	37	1	37	37	1	3 7
3344	37	1	37	37	1	37	37	1	37	37	1	37	37	1	37	37	1	37	37	1	37	37	1	37	37	1	37
3346	37	1	37	37	1	37	37	1	37	37	1	37	37	1	37	37	1	37	37	1	37	37	1	37	37	1	3 7
3348	37	1	37	37	1	37	37	1	37	37	1	37	37	1	37	37	1	37	37	1	37	37	1	37	37	1	37
3350	37	1	37	37	1	37	37	1	37	37	1	37	37	1	37	37	1	37	37	1	37	37	1	37	37	1	37
3352	37	1	37	37	1	37	37	1	37	37		37	37	1	37	37	1	37	37	1	37	37	1	37	37	1	37
3354	37	1	37	37		37	37	1	37	37	1	37	37	1	37	37	1	37	37	1	37	37	1	37	37	1	37
3356	37	1	37	37	1	37	37	1	37	37	1	37	37	1	37	37	1	37	37	1	37	37	1	37	37	1	37
3358	37	1	37	37	1	37	37	1	37	37	1	37	37	1	37	37	1	37	37	1	37	37	1	37	37	1	37
3360	37	1	37	37	1	37	37	1	37	37	1	37	37	1	37	37	1	37	37	1	37	37	1	37	37	1	37
3362	37	1	37	37	1	37	37	1	37	37	1	37	37	1	37	37	1	37	37	1	37	37	1	37	37	1	37
3364	37	1	37	37	1	37	37	1	37	37	1	37	37	1	37	37	1	37	37	1	37	37	1	37	37	1	37
3366	35	1	35	35	1	35	35	1	35	35	1	35	35	1	35	35	1	35	35	1	35	35	1	35	35	1	35
3368	31	1	31	31	1	31	31	1	31	31	1	31	31	1	31	31	1	31	31	1	31	31	1	31	31	1	31
3370	28	1	28	28	1	28	28	1	28	28	1	28	28	1	28	28	1	28	28	1	28	28	1	28	28	1	28
3372	24	1	24	24	1	24	24	1	24	24	1	24	24	1	24	24	1	24	24	1	24	24	1	24	24	1	24
3374	20	1	20	20	1	20	20	1	20	20	1	20	20	1	20	20	1	20	20	1	20	20	1	20	20	1	20
3376	'7	1	17	17	1	17	17	1	17	17	1	17	?7	1	17	17	1	17	17	1	?7	17	1	17	17	1	17
3378	13	1	13	13	1	13	13	1	13	13	1	13	13	1	13	13	1	'3	13	1	13	13	1	13	13	1	13
3389	9	1	9	9	1	9	9	1	9	9	1	9	9	1	9	9	1	9	9	1	9	9	1	9	9	1	9
3382	6	1	6	6	1	6	6	1	6	6	1	6	6	1	6	6	1	6	6	1	6	6	1	6	6	1	6
3384	2	1	2	2	1	2	2	1	2	2	1	2	2	1	2	2	1	2	2	1	2	2	1	2	2	1	2
3386	0	0	0	0	0	0	0	0	0	0	0	0	0	0	0	0	0	0	0	0	0	0	0	0	0	0	0

Table 3b : Ka-up / Ka-down Coherency Test (Cont)

downlink\uplink	3581			3583			3585			3587			3589			3591			3593			3595			3597		
3314	2	36	37	2	36	37	2	36	37	2	36	37	2	36	37	2	36	37	2	36	37	2	36	37	2	36	37
3316	6	32	37	6	32	37	6	32	37	6	32	37	6	32	37	6	32	37	6	32	37	6	32	37	6	32	37
3318	10	28	37	10	28	37	10	28	37	10	28	37	10	28	37	10	28	37	10	28	37	10	28	37	10	28	37
3320	13	25	37	13	25	37	13	25	37	13	25	37	13	25	37	13	25	37	13	25	37	13	25	37	13	25	37
3322	17	21	37	17	21	37	17	21	37	17	21	37	17	21	37	17	21	37	17	21	37	17	21	37	17	21	37
3324	21	17	37	21	17	37	21	17	37	21	17	37	21	17	37	21	17	37	21	17	37	21	17	37	21	17	37
3326	24	14	37	24	14	37	24	14	37	24	14	37	24	14	37	24	14	37	24	14	37	24	14	37	24	14	37
3328	28	10	37	28	10	37	28	10	37	28	10	37	28	10	37	28	10	37	28	10	37	28	10	37	28	10	37
3330	32	6	37	32	6	37	32	6	37	32	6	37	32	6	37	32	6	37	32	6	37	32	6	37	32	6	37
3332	36	2	37	36	2	37	36	2	37	36	2	37	36	2	37	36	2	37	36	2	37	36	2	37	36	2	37
3334	37	1	37	37	1	37	37	1	37	37	1	37	37	1	37	37	1	37	37	1	37	37	1	37	37	1	37
3336	37	1	37	37	1	37	37	1	37	37	1	37	37	1	37	37	1	37	37	1	37	37	1	37	37	1	37
3338	37	1	37	37	1	37	37	1	37	37	1	37	37	1	37	37	1	37	37	1	37	37	1	37	37	1	37
3340	37	1	37	37	1	37	37	1	37	37	1	37	37	1	37	37	1	37	37	1	37	37	1	37	37	1	37
3342	37	1	37	37	1	37	37	1	37	37	1	37	37	1	37	37	1	37	37	1	37	37	1	37	37	1	37
3344	37	1	37	37	1	37	37	1	37	37	1	37	37	1	37	37	1	37	37	1	37	37	1	37	37	1	37
3346	37	1	37	37	1	37	37	1	37	37	1	37	37	1	37	37	1	37	37	1	37	37	1	37	37	1	37
3348	37	1	37	37	1	37	37	1	37	37	1	37	37	1	37	37	1	37	37	1	37	37	1	37	37	1	37
3350	37	1	37	37	1	37	37	1	37	37	1	37	37	1	37	37	1	37	37	1	37	37	1	37	37	1	37
3352	37	1	37	37	1	37	37	1	37	37	1	37	37	1	37	37	1	37	37	1	37	37	1	37	37	1	37
3354	37	1	37	37	1	37	37	1	37	37	1	37	37	1	37	37	1	37	37	1	37	37	1	37	37	1	37
3356	37	1	37	37	1	37	37	1	37	37	1	37	37	1	37	37	1	37	37	1	37	37	1	37	37	1	37
3358	37	1	37	37	1	37	37	1	37	37	1	37	37	1	37	37	1	37	37	1	37	37	1	37	37	1	37
3360	37	1	37	37	1	37	37	1	37	37	1	37	37	1	37	37	1	37	37	1	37	37	1	37	37	1	37
3362	37	1	37	37	1	37	37	1	37	37	1	37	37	1	37	37	1	37	37	1	37	37	1	37	37	1	37
3364	37	1	37	37	1	37	37	1	37	37	1	37	37	1	37	37	1	37	37	1	37	37	1	37	37	1	37
3366	35	1	35	35	1	35	35	1	35	35	1	35	35	1	35	35	1	35	35	1	35	35	1	35	35	1	35
3368	31	1	31	31	1	31	31	1	31	31	1	31	31	1	31	31	1	31	31	1	31	31	1	31	31	1	31
3370	28	1	28	28	1	28	28	1	28	28	1	28	28	1	28	28	1	28	28	1	28	28	1	28	28	1	28
3372	24	1	24	24	1	24	24	1	24	24	1	24	24	1	24	24	1	24	24	1	24	24	1	24	24	1	24
3374	20	1	20	20	1	20	20	1	20	20	1	20	20	1	20	20	1	20	20	1	20	20	1	20	20	1	20
3376	17	1	17	17	1	17	17	1	17	17	1	17	17	1	17	17	1	17	17	1	17	17	1	17	17	1	17
3378	13	1	13	13	1	13	13	1	13	13	1	13	13	1	13	13	1	13	13	1	13	13	1	13	13	1	13
3380	9	1	9	9	1	9	9	1	9	9	1	9	9	1	9	9	1	9	9	1	9	9	1	9	9	1	9
3382	6	1	6	6	1	6	6	1	6	6	1	6	6	1	6	6	1	6	6	1	6	6	1	6	6	1	6
3384	2	1	2	2	1	2	2	1	2	2	1	2	2	1	2	2	1	2	2	1	2	2	1	2	2	1	2
3386	0	0	0	0	0	0	0	0	0	0	0	0	0	0	0	0	0	0	0	0	0	0	0	0	0	0	0

Table 3b : Ka-up / Ka-down Coherency Test(Cont)

downlink \ uplink	3599			3601			3603			3605			3607			3609			3611			3613			3615		
3314	2	36	37	2	36	37	2	36	37	2	36	37	2	36	37	2	36	37	2	36	37	2	36	37	2	36	37
3316	6	32	37	6	32	37	6	32	37	6	32	37	6	32	37	6	32	37	6	32	37	6	32	37	6	32	37
3318	10	28	37	10	28	37	10	28	37	10	28	37	10	28	37	10	28	37	10	28	37	10	28	37	10	28	37
3320	13	25	37	13	25	37	13	25	37	13	25	37	13	25	37	13	25	37	13	25	37	13	25	37	13	25	37
3322	17	21	37	17	21	37	17	21	37	17	21	37	17	21	37	17	21	37	17	21	37	17	21	37	17	21	37
3324	21	17	37	21	17	37	21	17	37	21	17	37	21	17	37	21	17	37	21	17	37	21	17	37	21	17	37
3326	24	14	37	24	14	37	24	14	37	24	14	37	24	14	37	24	14	37	24	14	37	24	14	37	24	14	37
3328	28	10	37	28	10	37	28	10	37	28	10	37	28	10	37	28	10	37	28	10	37	28	10	37	28	10	37
3330	32	6	37	32	6	37	32	6	37	32	6	37	32	6	37	32	6	37	32	6	37	32	6	37	32	6	37
3332	36	2	37	36	2	37	36	2	37	36	2	37	36	2	37	36	2	37	36	2	37	36	2	37	36	2	37
3334	37	1	37	37	1	37	37	1	37	37	1	37	37	1	37	37	1	37	37	1	37	37	1	37	37	1	37
3336	37	1	37	37	1	37	37	1	37	37	1	37	37	1	37	37	1	37	37	1	37	37	1	37	37	1	37
3338	37	1	37	37	1	37	37	1	37	37	1	37	37	1	37	37	1	37	37	1	37	37	1	37	37	1	37
3340	37	1	37	37	1	37	37	1	37	37	1	37	37	1	37	37	1	37	37	1	37	37	1	37	37	1	37
3342	37	1	37	37	1	37	37	1	37	37	1	37	37	1	37	37	1	37	37	1	37	37	1	37	37	1	37
3344	37	1	37	37	1	37	37	1	37	37	1	37	37	1	37	37	1	37	37	1	37	37	1	37	37	1	37
3346	37	1	37	37	1	37	37	1	37	37	1	37	37	1	37	37	1	37	37	1	37	37	1	37	37	1	37
3348	37	1	37	37	1	37	37	1	37	37	1	37	37	1	37	37	1	37	37	1	37	37	1	37	37	1	37
3350	37	1	37	37	1	37	37	1	37	37	1	37	37	1	37	37	1	37	37	1	37	37	1	37	37	1	37
3352	37	1	37	37	1	37	37	1	37	37	1	37	37	1	37	37	1	37	37	1	37	37	1	37	37	1	37
3354	37	1	37	37	1	37	37	1	37	37	1	37	37	1	37	37	1	37	37	1	37	37	1	37	37	1	37
3356	37	1	37	37	1	37	37	1	37	37	1	37	37	1	37	37	1	37	37	1	37	37	1	37	37	1	37
3358	37	1	37	37	1	37	37	1	37	37	1	37	37	1	37	37	1	37	37	1	37	37	1	37	37	1	37
3360	37	1	37	37	1	37	37	1	37	37	1	37	37	1	37	37	1	37	37	1	37	37	1	37	37	1	37
3362	37	1	37	37	1	37	37	1	37	37	1	37	37	1	37	37	1	37	37	1	37	37	1	37	37	1	37
3364	37	1	37	37	1	37	37	1	37	37	1	37	37	1	37	37	1	37	37	1	37	37	1	37	37	1	37
3366	35	1	35	35	1	35	35	1	35	35	1	35	35	1	35	35	1	35	35	1	35	35	1	35	35	1	35
3368	31	1	31	31	1	31	31	1	31	31	1	31	31	1	31	31	1	31	31	1	31	31	1	31	31	1	31
3370	28	1	28	28	1	28	28	1	28	28	1	28	28	1	28	28	1	28	28	1	28	28	1	28	28	1	28
3372	24	1	24	24	1	24	24	1	24	24	1	24	24	1	24	24	1	24	24	1	24	24	1	24	24	1	24
3374	20	1	20	20	1	20	20	1	20	20	1	20	20	1	20	20	1	20	20	1	20	20	1	20	20	1	20
3376	17	1	17	17	1	17	17	1	17	17	1	17	17	1	17	17	1	17	17	1	17	17	1	17	17	1	17
3378	13	1	13	13	1	13	13	1	13	13	1	13	13	1	13	13	1	13	13	1	13	13	1	13	13	1	13
3380	9	1	9	9	1	9	9	1	9	9	1	9	9	1	9	9	1	9	9	1	9	9	1	9	9	1	9
3382	6	1	6	6	1	6	6	1	6	6	1	6	6	1	6	6	1	6	6	1	6	6	1	6	6	1	6
3384	2	1	2	2	1	2	2	1	2	2	1	2	2	1	2	2	1	2	2	1	2	2	1	2	2	1	2
3386	0	0	0	0	0	0	0	0	0	0	0	0	0	0	0	0	0	0	0	0	0	0	0	0	0	0	0

Table 3b : Ka-up / Ka-down Coherency Test (Cont)

dnlink\uplink	3617			3619			3621			3623			3625			3627			3629			3631			3633			3635		
3314	2	3 6	3 7	1 2	3 6	3	72	36	37	2	36	37	2	36	37	2	36	37	2	36	37	2	36	37	2 3 6	3 7	1 2 3 6	37	2	36	37
3316	6	3 2	37	6	32	37	6	32	37	6	32	37	6	32	37	6	32	37	6	3 2	37	6	32	37	6	32	3 2 3	7 6	32	37
3318	10	28	37	10	28	37	10	28	37	10	28	37	10	28	37	10	28	37	10	28	37	10	28	37	10	28	37	10	28	37
3329	13	25	37	13	25	37	13	25	37	13	25	37	13	25	37	13	25	37	13	25	37	13	25	37	23	25	37	13	25	37
3322	17	21	37	17	21	37	17	21	37	17	21	37	17	21	37	17	21	37	17	21	37	17	21	37	17	21	37	17	21	37
3324	21	17	37	21	17	37	21	17	37	21	27	37	21	17	37	21	17	37	21	17	37	21	17	37	21	17	37	21	17	37
3326	24	14	37	24	14	37	24	14	37	24	14	37	24	14	37	24	14	37	24	14	37	24	14	37	24	14	37	24	14	37
3328	28	10	37	28	10	37	28	10	37	28	10	37	28	10	37	28	10	37	28	10	37	28	10	37	28	10	37	28	10	37
3330	32	6	37	32	6	37	32	6	37	32	6	37	32	6	37	32	6	37	32	6	37	32	6	37	32	6	37	32	6	37
3332	36	2	37	36	2	37	36	2	37	36	2	37	36	2	37	36	2	37	36	2	37	36	2	37	36	2	37	36	2	37
3334	37	1	37	37	1	37	37	1	37	37	1	37	37	1	37	37	1	37	37	1	37	37	1	37	37	1	37	37	1	37
3336	37	1	37	37	1	37	37	1	37	37	1	37	37	1	37	37	1	37	37	1	37	37	1	37	37	1	37	37	1	37
3338	37	1	37	37	1	37	37	1	37	37	1	37	37	1	37	37	1	37	37	1	37	37	1	37	37	1	37	37	1	37
3340	37	1	37	37	1	37	37	1	37	37	1	37	37	1	37	37	1	37	37	1	37	37	1	37	37	1	37	37	1	37
3342	37	1	37	37	1	37	37	1	37	37	1	37	37	1	37	37	1	37	37	1	37	37	1	37	37	1	37	37	1	37
3344	37	1	37	37	1	37	37	1	37	37	1	37	37	1	37	37	1	37	37	1	37	37	1	37	37	1	37	37	1	37
3346	37	1	37	37	1	37	37	1	37	37	1	37	37	1	37	37	1	37	37	1	37	37	1	37	37	1	37	37	1	37
3348	37	1	37	37	1	37	37	1	37	37	1	37	37	1	37	37	1	37	37	1	37	37	1	37	37	1	37	37	1	37
3350	37	1	37	37	1	37	37	1	37	37	1	37	37	1	37	37	1	37	37	1	37	37	1	37	37	1	37	37	1	37
3352	37	1	37	37	1	37	37	1	37	37	1	37	37	1	37	37	1	37	37	1	37	37	1	37	37	1	37	37	1	37
3354	37	1	37	37	1	37	37	1	37	37	1	37	37	1	37	37	1	37	37	1	37	37	1	37	37	1	37	37	1	37
3356	37	1	37	37	1	37	37	1	37	37	1	37	37	1	37	37	1	37	37	1	37	37	1	37	37	1	37	37	1	37
3358	37	1	37	37	1	37	37	1	37	37	1	37	37	1	37	37	1	37	37	1	37	37	1	37	37	1	37	37	1	37
3369	37	1	37	37	1	37	37	1	37	37	1	37	37	1	37	37	1	37	37	1	37	37	1	37	37	1	37	37	1	37
3362	37	1	37	37	1	37	37	1	37	37	1	37	37	1	37	37	1	37	37	1	37	37	1	37	37	1	37	37	1	37
3364	37	1	37	37	1	37	37	1	37	37	1	37	37	1	37	37	1	37	37	1	37	37	1	37	37	1	37	37	1	37
3366	35	1	35	35	1	35	35	1	35	35	1	35	35	1	35	35	1	35	35	1	35	35	1	35	35	1	35	35	1	35
3368	31	1	31	31	1	31	31	1	31	31	1	31	31	1	31	31	1	31	31	1	31	31	1	31	31	1	31	31	1	31
3370	28	1	28	28	1	28	28	1	28	28	1	28	28	1	28	28	1	28	28	1	28	28	1	28	28	1	28	28	1	28
3372	24	1	24	24	1	24	24	1	24	24	1	24	24	1	24	24	1	24	24	1	24	24	1	24	24	1	24	24	1	24
3374	20	1	20	20	1	20	20	1	20	20	1	20	20	1	20	20	1	20	20	1	20	20	1	20	20	1	20	20	1	20
3376	17	1	17	17	1	17	17	1	17	17	1	17	17	1	17	17	1	17	17	1	17	17	1	17	17	1	17	17	1	17
3378	23	1	13	13	1	13	13	1	13	13	1	13	13	1	13	13	1	13	13	1	13	13	1	13	13	1	13	13	1	13
3389	9	1	9	9	1	9	9	1	9	9	1	9	9	1	9	9	1	9	9	1	9	9	1	9	Y	1	9	9	1	9
3382	6	1	6	6	1	6	6	1	6	6	1	6	6	1	6	6	1	6	6	1	6	6	1	6	6	1	6	6	1	6
3384	2	1	2	2	1	2	2	1	2	2	1	2	2	1	2	2	1	2	2	1	2	2	1	2	2	1	2	2	1	2
3386	0	0	0	0	0	0	0	0	0	0	0	0	0	0	0	0	0	0	0	0	0	c	0	0	0	n	0	0	0	0

30-Jul-93 J . A. Koukos

Table 3c : Ka-up/X-down,Ka- down Coherency Test :

downlink\uplink	3563			3565			3567			3569			3571			3573			3575			3577			3579		
3314	2	38	39	4	36	39	4	36	39	4	36	39	4	36	39	4	36	39	4	36	39	4	36	39	4	36	39
3316	2	38	39	6	34	39	8	32	39	8	32	39	8	32	39	8	32	39	8	32	39	8	32	39	8	32	39
3318	2	38	39	6	34	39	9	31	39	12	28	39	12	28	39	12	28	39	12	28	39	12	28	39	12	28	39
3320	2	38	39	6	34	39	9	31	39	13	27	39	15	25	39	15	25	39	15	25	39	15	25	39	15	25	39
3322	2	38	39	6	34	39	9	31	39	13	27	39	16	24	39	19	21	39	19	21	39	19	21	39	19	21	39
3324	2	38	39	6	34	39	9	31	39	13	27	39	16	24	39	19	21	39	23	17	39	23	17	39	23	17	39
3326	2	38	39	6	34	39	9	31	39	13	27	39	16	24	39	19	21	39	23	17	39	26	14	39	26	14	39
3328	2	38	39	6	34	39	9	31	39	13	27	39	16	24	39	19	21	39	23	17	39	26	14	39	30	10	39
3330	2	38	39	6	34	39	9	31	39	13	27	39	16	24	39	19	21	39	23	17	39	26	14	39	30	10	39
3332	2	38	39	6	34	39	9	31	39	13	27	39	16	24	39	19	21	39	23	17	39	26	14	39	30	10	39
3334	2	38	39	6	34	39	9	31	39	13	27	39	16	24	39	19	21	39	23	17	39	26	14	39	30	10	39
3336	2	38	39	6	34	39	9	31	39	13	27	39	16	24	39	19	21	39	23	17	39	26	14	39	30	10	39
3338	2	38	39	6	34	39	9	31	39	13	27	39	16	24	39	19	21	39	23	17	39	26	14	39	30	10	39
3340	2	38	39	6	34	39	9	31	39	13	27	39	16	24	39	19	21	39	23	17	39	26	14	39	30	10	39
3342	2	38	39	6	34	39	9	31	39	13	27	39	16	24	39	19	21	39	23	17	39	26	14	39	30	10	39
3344	2	38	39	6	34	39	9	31	39	13	27	39	16	24	39	19	21	39	23	17	39	26	14	39	30	10	39
3346	2	38	39	6	34	39	9	31	39	13	27	39	16	24	39	19	21	39	23	17	39	26	14	39	30	10	39
3348	2	38	39	6	34	39	9	31	39	13	27	39	16	24	39	19	21	39	23	17	39	26	14	39	30	10	39
3350	2	38	39	6	34	39	9	31	39	13	27	39	16	24	39	19	21	39	23	17	39	26	14	39	30	10	39
3352	2	38	39	6	34	39	9	31	39	13	27	39	16	24	39	19	21	39	23	17	39	26	14	39	30	10	39
3354	2	38	39	6	34	39	9	31	39	13	27	39	16	24	39	19	21	39	23	17	39	26	14	39	30	10	39
3356	2	38	39	6	34	39	9	31	39	13	27	39	16	24	39	19	21	39	23	17	39	26	14	39	30	10	39
3358	2	38	39	6	34	39	9	31	39	13	27	39	16	24	39	19	21	39	23	17	39	26	14	39	30	10	39
3360	2	38	39	6	34	39	9	31	39	13	27	39	16	24	39	19	21	39	23	17	39	26	14	39	30	10	39
3362	2	38	39	6	34	39	9	31	39	13	27	39	16	24	39	19	21	39	23	17	39	26	14	39	30	10	39
3364	2	38	39	6	34	39	9	31	39	13	27	39	16	24	39	19	21	39	23	17	39	26	14	39	30	10	39
3366	0	0	0	2	34	35	5	31	35	9	27	35	12	24	35	15	21	35	19	17	35	22	14	35	26	10	35
3368	0	0	0	0	0	0	1	31	31	5	27	32	8	24	31	11	21	31	15	17	31	18	14	31	22	10	31
3370	0	0	0	0	0	0	0	0	0	2	27	28	5	24	28	8	21	28	12	17	28	15	14	28	19	10	28
3372	0	0	0	0	0	0	0	0	0	0	0	0	1	24	24	4	21	24	8	17	24	11	14	24	15	10	24
3374	0	0	0	0	0	0	0	0	0	0	0	0	0	0	0	0	0	0	4	17	20	7	14	20	11	10	20
3376	0	0	0	0	0	0	0	0	0	0	0	0	0	0	0	0	0	0	1	17	17	4	14	17	8	10	17
3378	0	0	0	0	0	0	0	0	0	0	0	0	0	0	0	0	0	0	0	0	0	0	0	0	4	10	13
3380	0	0	0	0	0	0	0	0	0	0	0	0	0	0	0	0	0	0	0	0	0	0	0	0	0	0	0
3382	0	0	0	0	0	0	0	0	0	0	0	0	0	0	0	0	0	0	0	0	0	0	0	0	0	0	0
3384	0	0	0	0	0	0	0	0	0	0	0	0	0	0	0	0	0	0	0	0	0	0	0	0	0	0	0
3386	0	0	0	0	0	0	0	0	0	0	0	0	0	0	0	0	0	0	0	0	0	0	0	0	0	0	0

Table 3c : Ka-up/X-down, Ka-down Coherency Test(Cont):

downlink\uplink	3581			3583			3585			3587			3589			3591			3593			3595			3597		
3314		36	39	4	36	39	4	36	39	4	36	39	4	36	39	4	36	39	4	36	39	4	36	39	4	36	39
3316	8	32	39	8	32	39	8	32	39	8	32	39	8	32	39	8	32	39	8	32	39	8	32	39	8	32	39
3318	12	28	39	12	28	39	12	28	39	12	28	39	12	28	39	12	28	39	12	28	39	12	28	39	12	28	39
3320	25	25	39	15	25	39	15	25	39	15	25	39	15	25	39	25	25	39	15	25	39	15	25	39	15	25	39
3322	19	21	39	19	21	39	19	21	39	19	21	39	19	21	39	29	21	39	19	21	39	19	21	39	19	21	39
3324	23	17	39	23	17	39	23	17	39	23	17	39	23	17	39	23	17	39	23	17	39	23	17	39	23	17	39
3326	26	14	39	26	14	39	26	14	39	26	14	39	26	14	39	26	14	39	26	14	39	26	14	39	26	14	39
3328	30	10	39	30	10	39	30	10	39	30	10	39	30	10	39	30	10	39	30	10	39	30	10	39	30	10	39
3330	33	7	39	34	6	39	34	6	39	34	6	39	34	6	39	34	6	39	34	6	39	34	6	39	34	6	39
3332	33	7	39	37	3	39	37	3	39	37	3	39	37	3	39	37	3	39	37	3	39	37	3	39	37	3	39
3334	33	7	39	37	3	39	37	3	39	37	3	39	37	3	39	37	3	39	37	3	39	37	3	39	37	3	39
3336	33	7	39	37	3	39	37	3	39	37	3	39	37	3	39	37	3	39	37	3	39	37	3	39	37	3	39
3338	33	?	39	37	3	39	37	3	39	37	3	39	37	3	39	37	3	39	37	3	39	37	3	39	37	3	39
3340	33	7	39	37	3	39	37	3	39	37	3	39	37	3	39	37	3	39	37	3	39	37	3	39	37	3	39
3342	33	7	39	37	3	39	37	3	39	37	3	39	37	3	39	37	3	39	37	3	39	37	3	39	37	3	39
3344	33	7	39	37	3	39	37	3	39	37	3	39	37	3	39	37	3	39	37	3	39	37	3	39	37	3	39
3366	33	7	39	37	3	39	37	3	39	37	3	39	37	3	39	37	3	39	37	3	39	37	3	39	37	3	39
3348	33	7	39	37	3	39	37	3	39	37	3	39	37	3	39	37	3	39	37	3	39	37	3	39	37	3	39
3350	33	7	39	37	3	39	37	3	39	37	3	39	37	3	39	37	3	39	37	3	39	37	3	39	37	3	39
5352	33	7	39	37	3	39	37	3	39	37	3	39	37	3	39	37	3	39	37	3	39	37	3	39	37	3	39
3354	33	7	39	37	3	39	37	3	39	37	3	39	37	3	39	37	3	39	37	3	39	37	3	39	37	3	39
3356	33	7	39	37	3	39	37	3	39	37	3	39	37	3	39	37	3	39	37	3	39	37	3	39	37	3	39
3358	33	7	39	37	3	39	37	3	39	37	3	39	37	3	39	37	3	39	37	3	39	37	3	39	37	3	39
3360	33	7	39	37	3	39	37	3	39	37	3	39	37	3	39	37	3	39	37	3	39	37	3	39	37	3	39
3362	33	7	39	37	3	39	37	3	39	37	3	39	37	3	39	37	3	39	37	3	39	37	3	39	37	3	39
3364	33	7	39	37	3	39	37	3	39	37	3	39	37	3	39	37	3	39	37	3	39	37	3	39	37	3	39
3366	29	7	35	33	3	35	33	3	35	33	3	35	33	3	35	33	3	35	33	3	35	33	3	35	33	3	35
3368	25	7	31	29	3	31	29	3	31	29	3	31	29	3	31	29	3	31	29	3	31	29	3	31	29	3	31
3370	22	7	28	26	3	28	26	3	28	26	3	28	26	3	28	26	3	28	26	3	28	26	3	28	26	3	28
3372	18	7	24	22	3	24	22	3	24	22	3	24	22	3	24	22	3	24	22	3	24	22	3	24	22	3	24
3374	14	7	20	18	3	20	18	3	20	18	3	20	18	3	20	18	3	20	18	3	20	18	3	20	18	3	20
3376	11	7	17	15	3	17	15	3	17	15	3	17	15	3	17	15	3	17	15	3	17	15	3	17	15	3	17
3378	7	7	13	11	3	13	11	3	13	11	3	13	11	3	13	11	3	13	11	3	13	11	3	13	11	3	13
3380	3	7	9	7	3	9	7	3	9	7	3	9	7	3	9	7	3	9	7	3	9	7	3	9	7	3	9
3382	0	0	0	4	3	6	4	3	6	4	3	6	4	3	6	4	3	6	4	3	6	4	3	6	4	3	6
3384	0	0	0	0	0	0	0	0	0	0	0	0	0	0	0	0	0	0	0	0	0	0	0	0	0	0	0
3386	0	0	0	0	0	0	0	0	0	0	0	0	0	0	0	0	0	0	0	0	0	0	0	0	0	0	0

Table 3c : Ka-up/X-down,Ka-down Coherency Test (Cent) :

downlink\uplink	3599			3601			3603			3605			3607			3609			3611			3613			3625		
3314	4	36	39	4	36	39	4	36	39	4	36	39	4	36	39	4	36	39	4	36	39	2	36	37	2	36	37
3316	8	32	39	8	32	39	8	32	39	8	32	39	8	32	39	8	32	39	8	32	39	6	32	37	6	32	37
3318	12	28	39	12	28	39	12	28	39	22	28	39	12	28	39	22	28	39	12	28	39	10	28	37	10	28	37
3320	15	25	39	15	25	39	15	25	39	15	25	39	15	25	39	15	25	39	15	25	39	13	25	37	13	25	37
3322	19	21	39	19	21	39	19	21	39	29	21	39	19	21	39	19	21	39	19	21	39	17	21	37	17	21	37
3324	23	27	39	23	17	39	23	17	39	23	17	39	23	17	39	23	17	39	23	17	39	21	17	37	2'	17	37
3326	26	14	39	26	14	39	.26	14	39	26	"4	39	26	14	39	26	14	39	26	14	39	24	14	37	24	14	37
3328	30	10.	39	30	10	39	30	10	39	30	10	39	30	'o	39	30	10	39	30	10	39	28	10	37	28	10	37
3330	34	6	39	34	6	39	34	6	39	34	6	39	34	6	39	34	6	39	34	6	39	32	6	37	32	6	37
3332	37	3'	39	37	3	39	37	3	39	37	3	39	37	3	39	37	3	39	37	3	39	35	3	37	35	3	37
3334	37	3	39	37	3	39	37	3	39	37	3	39	37	3	39	37	3	39	37	3	39	35	3	37	35	3	37
3336	37	3	39	37	3	39	37	3	39	37	3	39	37	3	39	37	3	39	37	3	39	35	3	37	35	3	37
3338	37	3	39	37	3	39	37	3	39	37	3	39	37	3	39	37	3	39	37	3	39	35	3	37	35	3	37
3340	37	3	39	37	3	39	37	3	39	37	3	39	37	3	39	37	3	39	37	3	39	35	3	37	35	3	37
3342	37	3	39	37	3	39	37	3	39	37	3	39	37	3	39	37	3	39	37	3	39	35	3	37	35	3	37
3344	37	3	39	37	3	39	37	3	39	37	3	39	37	3	39	37	3	39	37	3	39	35	3	37	35	3	37
3346	37	3	39	37	3	39	37	3	39	37	3	39	37	3	39	37	3	39	37	3	39	35	3	37	35	3	37
3348	37	3	39	37	3	39	37	3	39	37	3	39	37	3	39	37	3	39	37	3	39	35	3	37	35	3	37
3350	37	3	39	37	3	39	37	3	39	37	3	39	37	3	39	37	3	39	37	3	39	35	3	37	35	3	37
3352	37	3	39	37	3	39	37	3	39	37	3	39	37	3	39	37	3	39	37	3	30	35	3	37	35	3	37
3354	37	3	39	37	3	39	37	3	39	37	3	39	37	3	39	37	3	39	37	3	39	35	3	37	35	3	37
3356	37	3	39	37	3	39	37	3	39	37	3	39	37	3	39	37	3	39	37	3	39	35	3	37	35	3	37
3358	37	3	39	37	3	39	37	3	39	37	3	39	37	3	39	37	3	39	37	3	39	35	3	37	35	3	37
3360	37	3	39	37	3	39	37	3	39	37	3	39	37	3	39	37	3	39	37	3	39	35	3	37	35	3	37
3362	37	3	39	37	3	39	37	3	39	37	3	39	37	3	39	37	3	39	37	3	39	35	3	37	35	3	37
3364	37	3	39	37	3	39	37	3	39	37	3	39	37	3	39	37	3	39	37	3	39	35	3	37	35	3	37
3366	33	3	35	33	3	35	33	3	35	33	3	35	33	3	35	33	3	35	33	3	35	33	3	35	33	3	35
3368	29	3	31	29	3	31	29	3	31	29	3	31	29	3	31	29	3	31	29	3	31	29	3	31	29	3	31
3370	26	3	28	26	3	28	26	3	28	26	3	28	26	3	28	26	3	28	26	3	28	26	3	28	26	3	28
3372	22	3	24	22	3	24	22	3	24	22	3	24	22	3	24	22	3	24	22	3	24	22	3	24	22	3	24
3374	18	3	20	18	3	20	18	3	20	18	3	20	18	3	20	18	3	20	18	3	20	18	3	20	18	3	20
3376	15	3	17	'5	3	17	15	3	17	25	3	17	15	3	17	15	3	17	15	3	17	15	3	17	15	3	17
3378	"1	3	13	11	3	13	11	3	13	11	3	13	11	3	13	11	3	13	11	3	13	11	3	13	11	3	13
3389	7	3	9	7	3	9	7	3	9	7	3	9	7	3	9	7	3	9	7	3	9	7	3	9	7	3	9
3382	4	3	6	4	3	6	'4	3	6	4	3	6	4	3	6	4	3	6	4	3	6	4	3	6	4	3	6
3384	0	0	0	o	0	o	o	0	0	0	0	0	0	0	0	0	0	0	0	0	0	0	0	0	0	0	0
3326	0	0	0	0	0	0	0	0	0	0	0	o	0	0	0	0	0	o	0	0	0	0	0	0	0	0	0

Table 3c : Ka-up/X-down, Ka-down Coherency Test (Cent) :

dnlink\uplink	3617			3629			3621			3623			3625			3627			3629			3631			3633			3635		
3314	0	0	0	0	0	0	0	0	0	0	0	0	0	0	0	0	0	0	0	0	0	0	0	0	0	0	0	0	0	0
3316	3	32	34	0	0	0	0	0	0	0	0	0	0	0	0	0	0	0	0	0	0	0	0	0	0	0	0	0	0	0
3318	7	28	34	3	28	30	0	0	0	0	0	0	0	0	0	0	0	0	0	0	0	0	0	0	0	0	0	0	0	0
3320	10	25	34	6	25	30	3	25	27	0	0	0	0	0	0	0	0	0	0	0	0	0	0	0	0	0	0	0	0	0
3322	14	21	34	10	21	30	7	21	27	3	21	23	0	0	0	0	0	0	0	0	0	0	0	0	0	0	0	0	0	0
3324	18.	17	34	14	17	30	11	17	27	7	17	23	4	17	20	1	17	17	0	0	0	0	0	0	0	0	0	0	0	0
3326	21	14	34	17	14	30	14	14	27	10	14	23	7	14	20	4	14	17	0	0	0	0	0	0	0	0	0	0	0	0
3328	25	10	34	21	10	30	18	10	27	14	10	23	11	10	20	8	10	17	4	10	13	1	10	10	0	0	0	0	0	0
3330	29	6	34	25	6	30	22	6	27	18	6	23	15	6	20	22	6	17	8	6	13	5	6	10	1	6	6	0	0	0
3332	32	3	34	28	3	30	25	3	27	21	3	23	18	3	20	15	3	17	11	3	13	8	3	10	4	3	6	1	3	3
3334	32	3	34	28	3	30	25	3	27	21	3	23	18	3	20	15	3	17	11	3	13	8	3	10	4	3	6	1	3	3
3336	32	3	34	28	3	30	25	3	27	21	3	23	18	3	20	15	3	17	11	3	13	8	3	10	4	3	6	1	3	3
3338	32	3	34	28	3	30	25	3	27	21	3	23	18	3	20	15	3	17	11	3	13	8	3	10	4	3	6	1	3	3
3340	32	3	34	28	3	30	25	3	27	21	3	23	18	3	20	15	3	17	11	3	13	8	3	10	4	3	6	1	3	3
3342	32.	3	34	28	3	30	25	3	27	21	3	23	18	3	20	15	3	17	11	3	13	8	3	10	4	3	6	1	3	3
3344	32	3	34	28	3	30	25	3	27	21	3	23	18	3	20	15	3	17	11	3	13	8	3	10	4	3	6	1	3	3
3346	32	3	34	28	3	30	25	3	27	27	3	23	18	3	20	15	3	17	11	3	13	8	3	10	4	3	6	1	3	3
3348	32	3	34	28	3	30	25	3	27	21	3	23	18	3	20	15	3	17	11	3	13	8	3	10	4	3	6	1	3	3
3350	32	3	34	28	3	30	25	3	27	21	3	23	18	3	20	15	3	17	11	3	13	8	3	10	4	3	6	1	3	3
3352	32	3	34	28	3	30	25	3	27	21	3	23	18	3	20	15	3	17	11	3	13	8	3	10	4	3	6	1	3	3
3354	32	3	34	28	3	30	25	3	27	21	3	23	18	3	20	15	3	17	11	3	13	8	3	10	4	3	6	1	3	3
3356	32	3	34	28	3	30	25	3	27	21	3	23	18	3	20	15	3	17	11	3	13	8	3	10	4	3	6	1	3	3
3358	32	3	34	28	3	30	25	3	27	21	3	23	18	3	20	15	3	17	11	3	13	8	3	10	4	3	6	1	3	3
3369	32	3	34	28	3	30	25	3	27	21	3	23	18	3	20	15	3	17	11	3	13	8	3	10	4	3	6	1	3	3
3362	32	3	34	28	3	30	25	3	27	21	3	23	18	3	20	15	3	17	11	3	13	8	3	10	4	3	6	1	3	3
3364	32	3	34	28	3	30	25	3	27	21	3	23	18	3	20	15	3	17	11	3	13	8	3	10	4	3	6	1	3	3
3366	32	3	34	29	3	30	25	3	27	21	3	23	18	3	20	15	3	17	11	3	13	8	3	10	4	3	6	1	3	3
3368	29	3	31	28	3	30	25	3	27	21	3	23	18	3	20	15	3	17	11	3	13	8	3	10	4	3	6	1	3	3
3370	26	3	28	26	3	28	25	3	27	21	3	23	18	3	20	15	3	17	11	3	13	8	3	10	4	3	6	1	3	3
3372	22	3	24	22	3	24	22	3	24	21	3	23	18	3	20	15	3	17	11	3	13	8	3	10	4	3	6	1	3	3
3374	18	3	20	18	3	20	18	3	20	1s	3	20	18	3	20	15	3	17	11	3	13	8	3	10	4	3	6	1	3	3
3376	15	3	17	15	3	17	15	3	17	15	3	17	15	3	17	15	3	17	11	3	13	8	3	10	4	3	6	1	3	3
3378	11	3	13	11	3	13	11	3	13	11	3	13	11	3	13	12	3	13	11	3	13	8	3	10	4	3	6	1	3	3
3380	7	3	9	7	3	9	7	3	9	7	3	9	7	3	9	7	3	9	7	3	9	7	3	9	4	3	6	1	3	3
3382	4	3	6	4	3	6	4	3	6	4	3	6	4	3	6	4	3	6	4	3	6	4	3	6	4	3	6	1	3	3
3384	0	0	0	0	0	0	0	0	0	0	0	0	0	0	0	0	0	0	0	0	0	0	0	0	0	0	0	0	0	0
3386	0	0	0	0	0	0	0	0	0	0	0	0	0	0	0	0	0	0	0	0	0	0	0	0	0	0	0	0	0	0

Table 4a : Coherent Uplink Prime Multiplication Factors

UPLINK FACTOR	PRIME MULTIPLICATION FACTORS
3563	7 x 509
3565	5 x 23 x 31
3567	3 x 29 x 41.
3569	43 x 83
3571	3571.
3573	3 x 3 x 397
3575	5 x 5 x 11 x 13
3 5 7 7	7 x 7 x 73
3579	3 x 1193
3581	3581
3583	3583
3585	3 x 5 x 239
3587	1-/ x 211
3589	37 x 97
3591	3 x 3 x 3 x 7 x 19
3593	3593
3595	5 x 719
3597	3 x 11 x 109
3599	59 x 61
3601	13 x 277
3603	3 x 1201
3605	5 x 7 x 103
3607	3607
3609	3 x 3 x 401
3611	23 x 157
3613	3613
3615	3 x 5 x 241
3617	3617
3619	7 x 11 x 47
3621	3 x 17 x 71
3623	3623
3625	5 x 5 x 5 x 29
3627	3 x 3 x 13 x 31
3629	19 x 191
3631	3631
3633	3 x 7 x 173
3635	5 x 727

Table 4b : Coherent Downlink Prime Multiplication Factors

DOWNLINK FACTOR	PRIME MULTIPLICATION FACTORS
3314	2 x 1657
3316	2 X 2 X 829
3318	2 x 3 x 7 x 79
3320	2 x 2 x 2 x 5 x 83
3322	2 X 1 1 X 151
3324	2 x 2 x 3 x 277
3326	2 x 1663
3328	2 x 2 x 2 x 2 x 2 x 2 x 2 X 1 3
3330	2 x 3 x3 x5 x 37
3332	2 x 2 x 7 x7 x 1.7
3334	2 x 1667
3336	2 x 2 x 2 x 3 x 139
3338	2 x 1669
3340	2 x 2 x 5 x 167
3342	2 x 3 x 557
3344	2 x 2 x 2 x 2 X 1 1 X 1 9
3346	2 x 7 x 239
3348	2 x 2 x 3 x3 x3 x 31
3350	2 x 5 x5 x 67
3352	2 x 2 x 2 x 419
3354	2 x 3 x13 x 43
3356	2 x 2 x 839
3358	2 x 2 3 x 73
3360	2 x 2 x 2 x 2 x 2 x 3 x 5 x 7
3362	2 x 41. x 41
3364	2 x 2 x 2 9 x 2 9
3366	2 x 3 x3 x11 x 17
3368	2 x 2 x 2 x 421
3370	2 x 5 x 337
3372	2 x 2 x 3 x 281
3374	2 x 7 x 241
3376	2 x 2 x 2 x 2 x 211
3378	2 x 3 x 563
3380	2 x 2 x 5 X1.3 x 13
3382	2 x 19 x 89
3384	2 x 2 x 2 x 3 x3 x 47

Table 5 : Uplink TMs satisfying AGC Limitations 100 MHz < IF Frequency < 10 GHz) versus VCO Frequency.

DOWN FACTOR	2f1	4fl	8fl	12f1
3332	3583 - 3591	3583 - 3595	N/A	N/'
3334	3583 - 3603	3583 - 3607	3583 - 3599	N/A
3360	3583 - 3615	3583 - 361.5	3583 - 3615	3583 - 3615

Table 6 : Uplink TMs satisfying Diplexer Limitations (TTFR Separation ≥ 7%) versus VCO Frequency.

DOWLINK FACTOR	2fl	4f1	8f1	12f1
3332	3583 - 3591	3583 -- 3595	N/'	N/'
3334	3583 - 3603	3583 - 3607	3583 - 3599	N / '
3360	3595 - 3615	3595 - 3615	3595 - 3615	3595 - 3615

Table 7 : Downlink Ka-Band TM's versus number of Channels in the [31.8, 32] GHz Band

D/L TM	# Channels	D/L TM	# Channels	D/L TM	# Channels
3314	7	3340	25	3364	0
3316	11	3342	22	3366	0
3318	15	3344	18	3368	0
3320	18	3346	14	3370	0
3322	22	3348	11	3372	0
3324	26	3350	7	3374	0
3326	29	3352	3	3376	0
3328	33	3354	0	3378	0
3330	37	3356	0	3380	0
3332	39	3358	0	3382	0
3334	37	3360	0	3384	0
3336	33	3362	0	3386	0
3338	29				

Table 8a - 3597/3344 Turnaround Ratio Multiplier Implementation Uplink, Downlink, 1st LO and 1st IF Factors

	FACTORS	PRIME MULTIPLICATION FACTOR
UPLINK	359"7	3 x 11 x 109
DOWNLINK	3344	2 x2 x 2 x 2 x 11 x 1.9
FIRST LO	3432	2 x2 x 2 x 3 x 11 x 1.3
FIRST IF	165	3 x5 x 11

Table 8b - 3599/3344 Turnaround Ratio Multiplier Implementation Uplink, Downlink, 1st LO and 1st IF Factors

	FACTORS	PRIME MULTIPLICATION FACTOR
UPLINK	3599	59 x 61
DOWNLINK	3344	2 x 2 x 2 x 2 x 11 x 19
FIRST LO	3344	2 x 2 x 2 x 2 x 11 x 19
FIRST IF	255	3 x 5 x 17

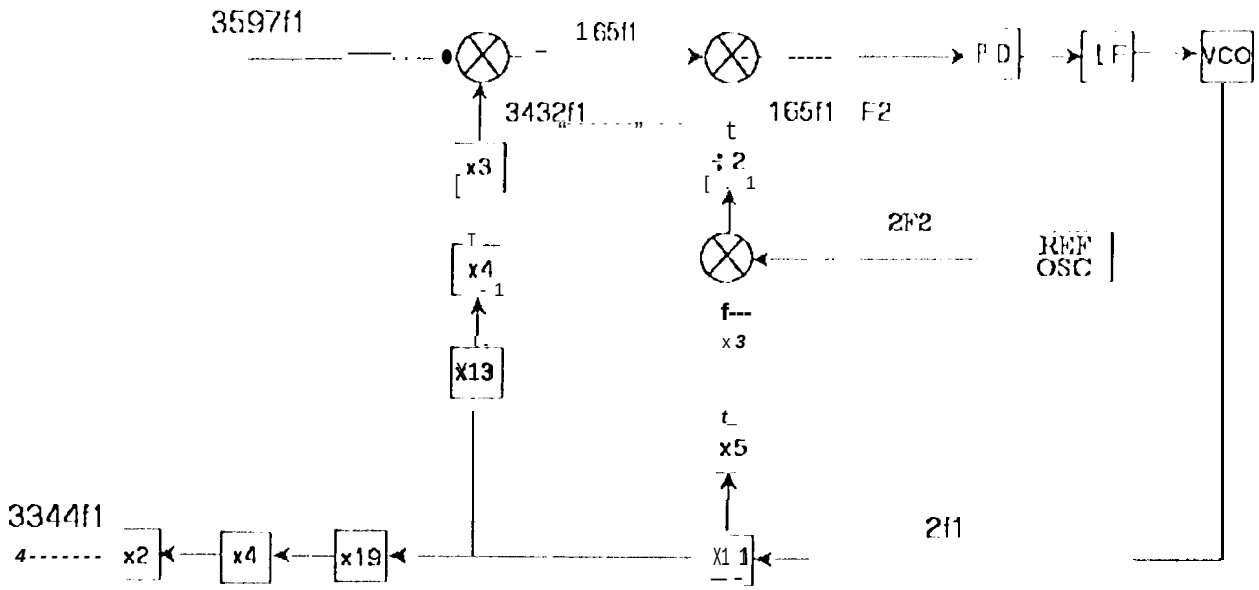

FIGURE 1 - 3597(S344 RATIOKA-BAND RECEIVER BLOCK DIAGRAM WITH A VCO FREQUENCY OF2f1

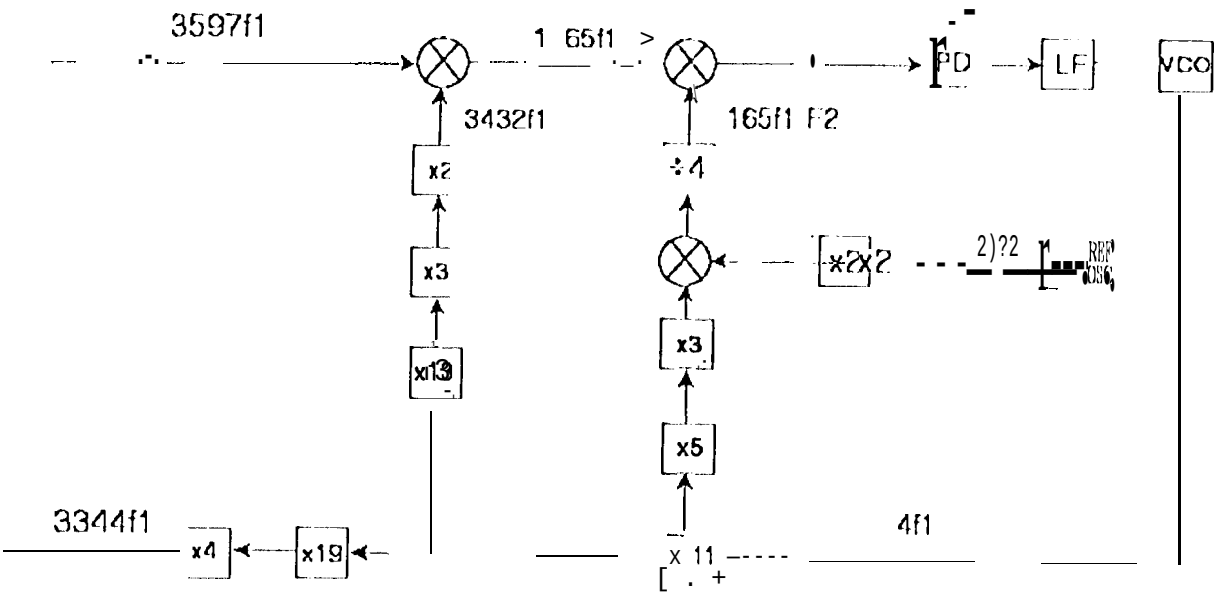

FIGURE 2- 3597/3344 RAT ICI KA-BAND RECEIVER BLOCK DIAGRAM WI H A VCO FREQUENCY OF 411

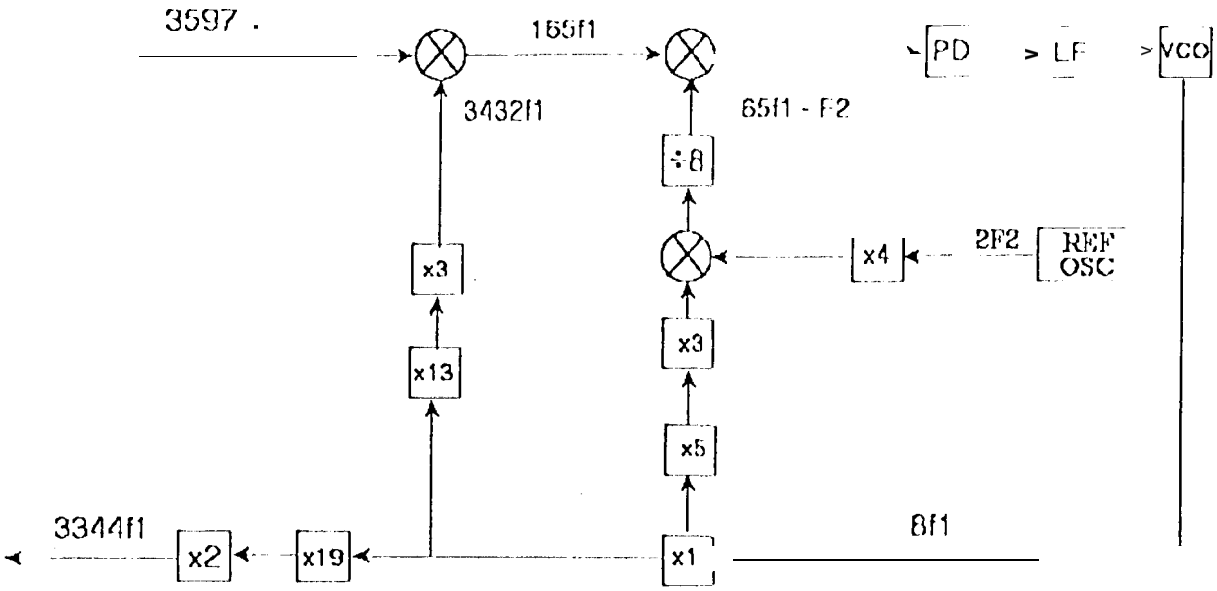

FIGURE 3 3597/3344 RATIO KA-BAND RECEIVER BLOCK DIAGRAM WITH A VCO FREQUENCY OF 8f1

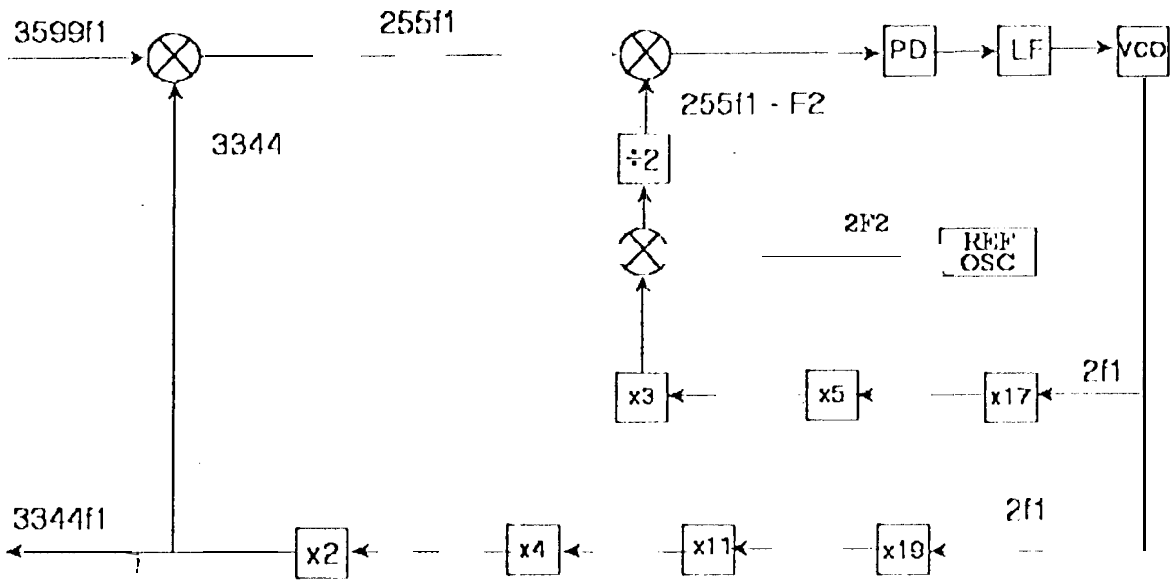

FIGURE 4 RATIO KA-BAND RECEIVER BLOCK DIAGRAM A VCO FREQUENCY OF 2f1

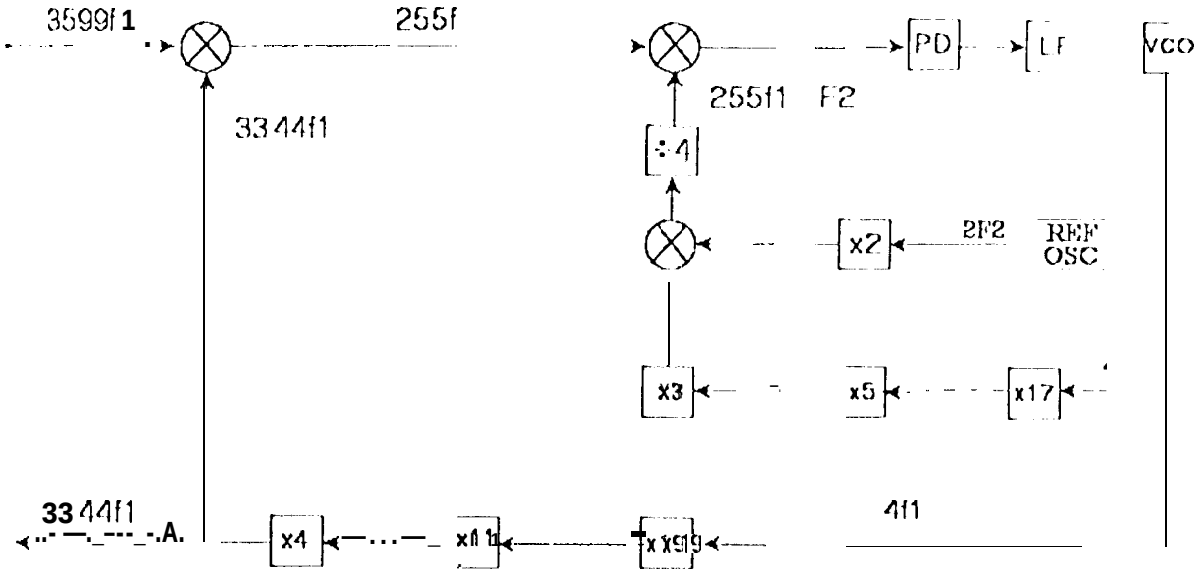

FIGURE 5- 3599/3344 RATIO KA-BAND RECEIVER BLOCK DIAGRAM WITH AVCO FREQUENCY OF 4f1

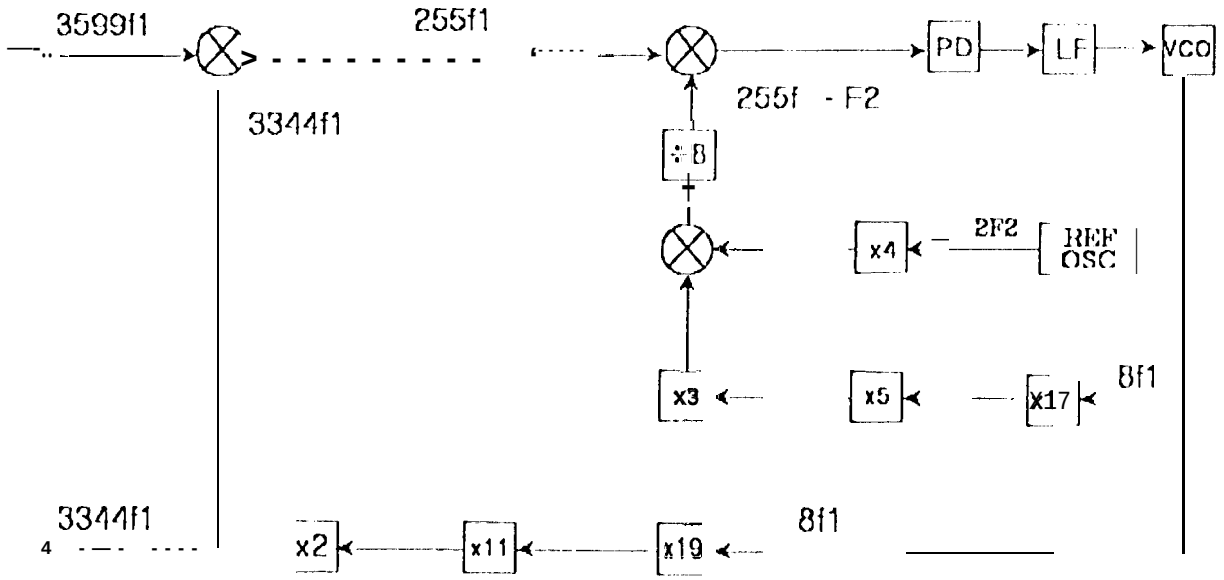

FIGURE 6 - 3599/3344 RATIO KA-BAND RECEIVER BLOCK DIAGRAM WITH AVCO FREQUENCY OF 8f1

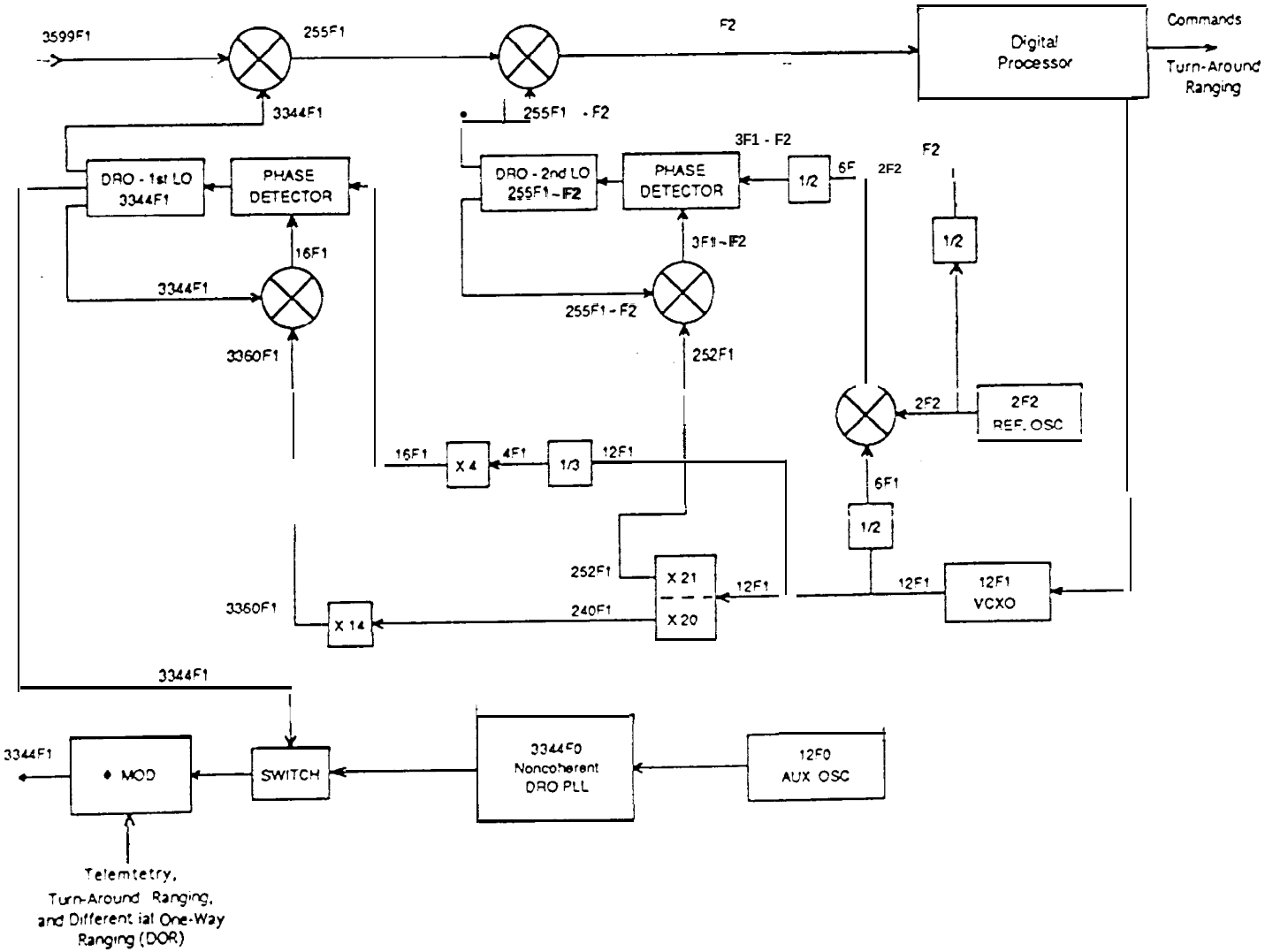

Figure 7: 3599/3344 F1 Double Conversion Frequency Scheme: Design 1

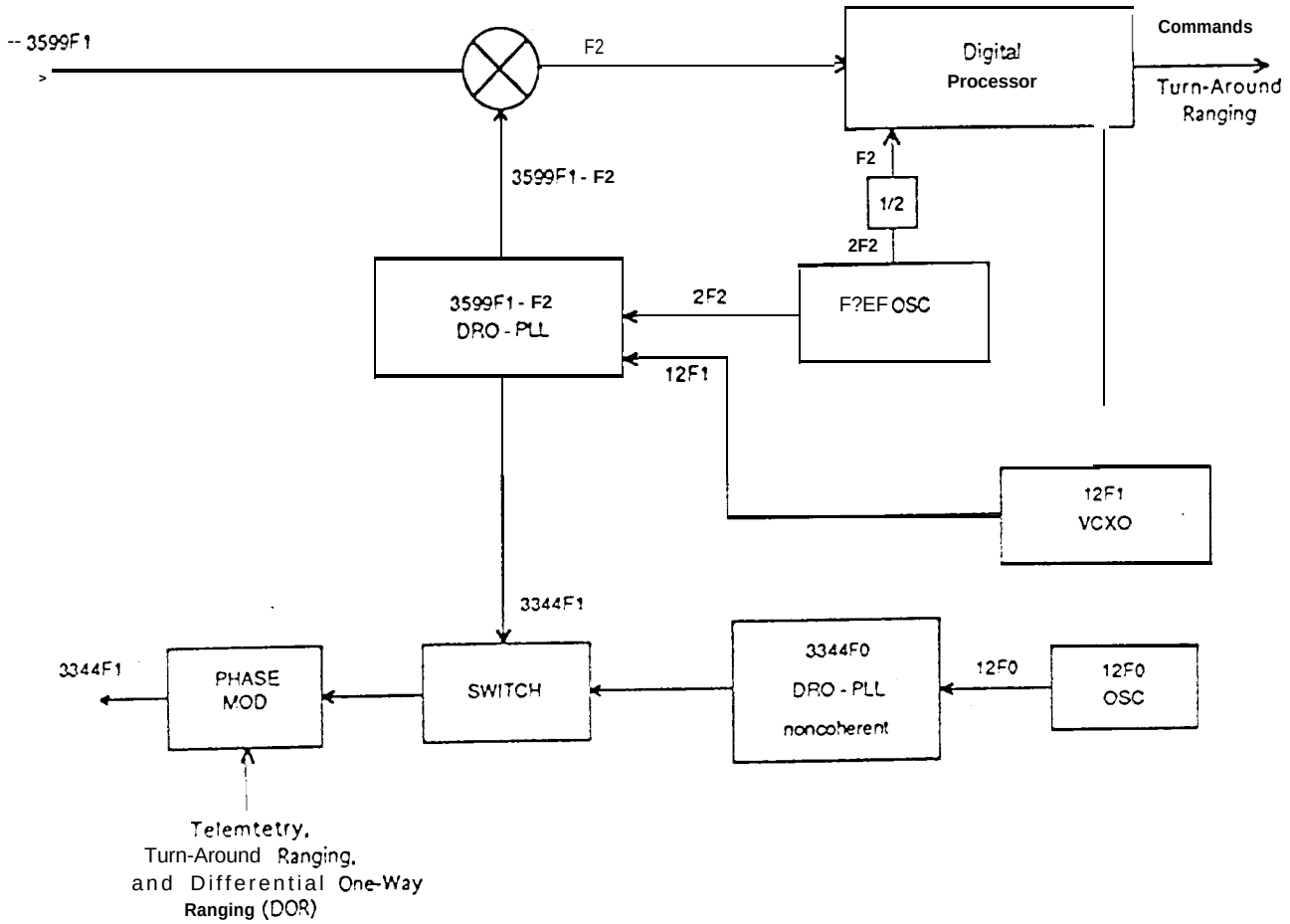

Figure 8: 3599/3344 F Single Conversion Frequency Scheme: Design 2

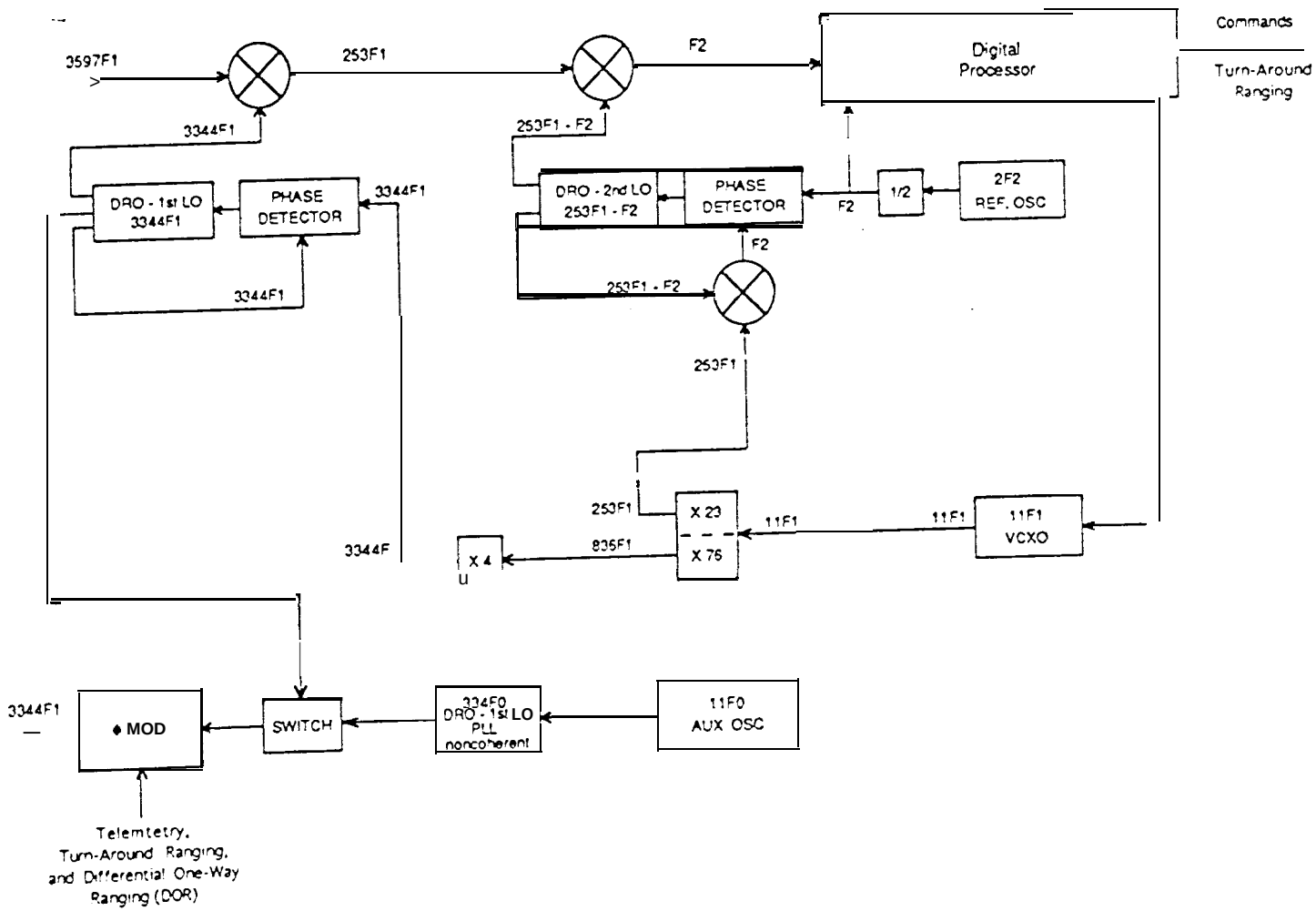

Figure 9: 3597/3344 F1 Double Conversion Frequency Scheme: Design W

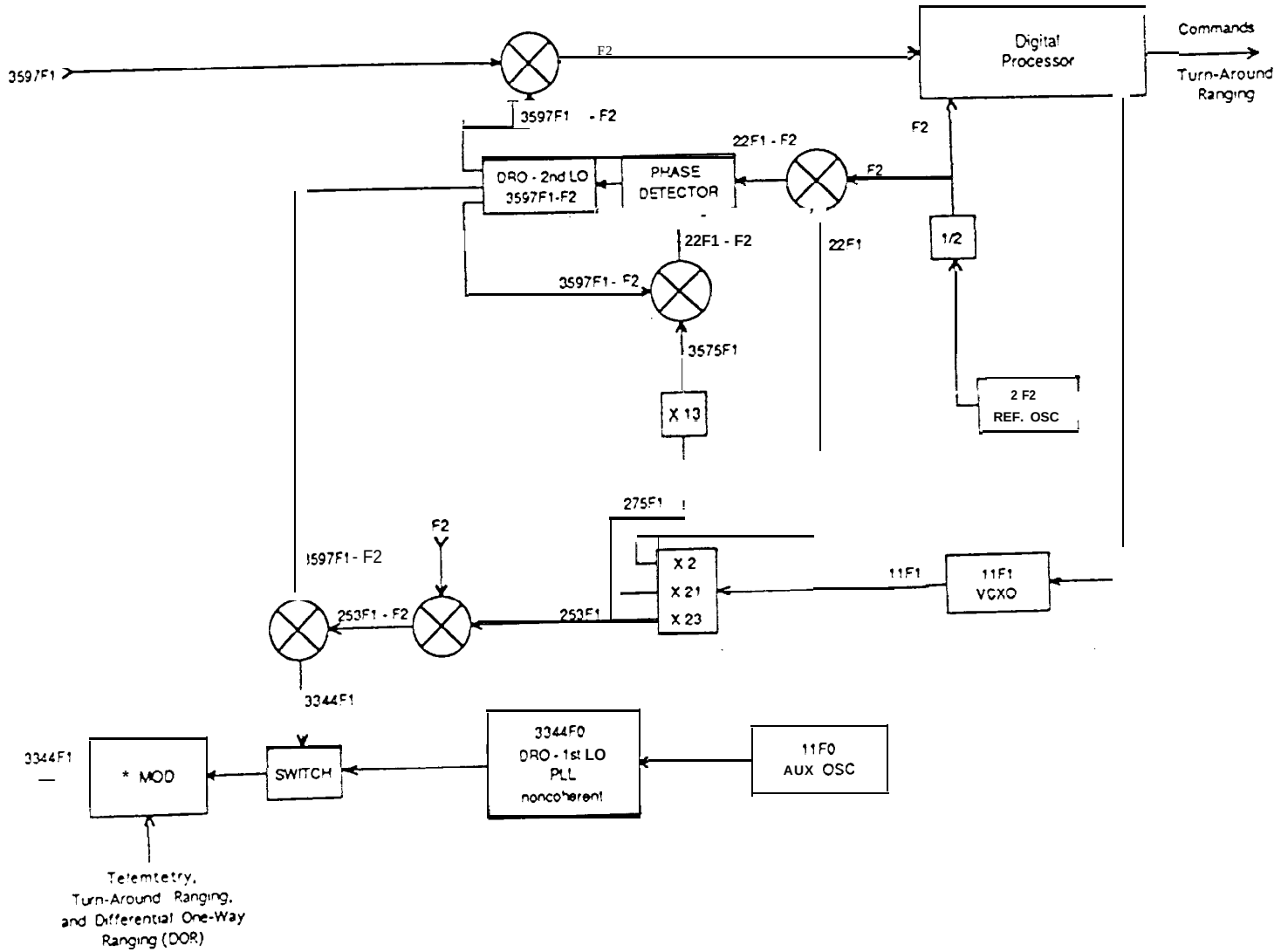

Figure 10 : 3597/3344 F1 Single Conversion Frequency Scheme: Design 4

Figure 11 749/3344 F1 Reduced Function Transponder Design 2

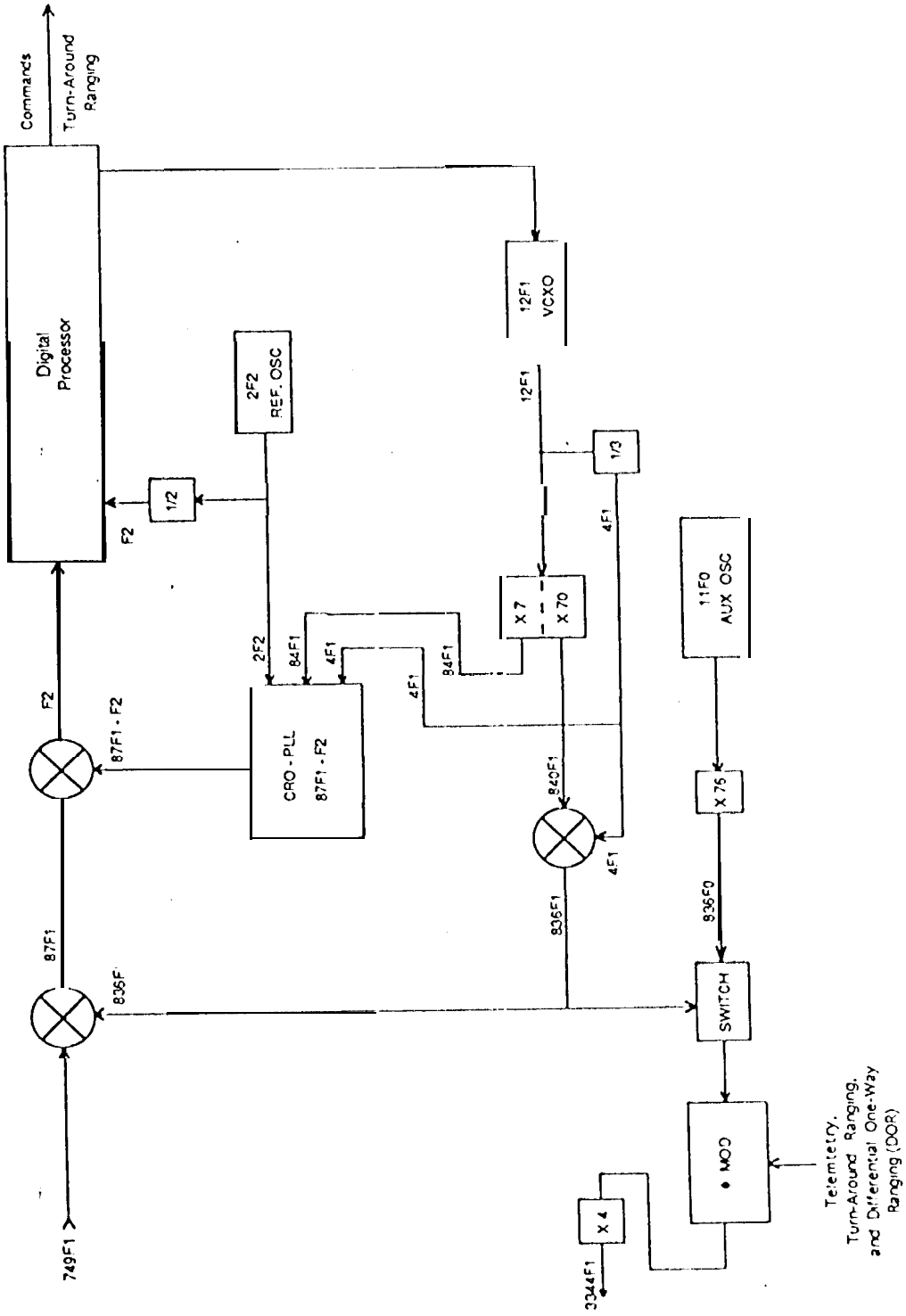

Fig. 12 Ka-Band DST Breadboard Upgrade

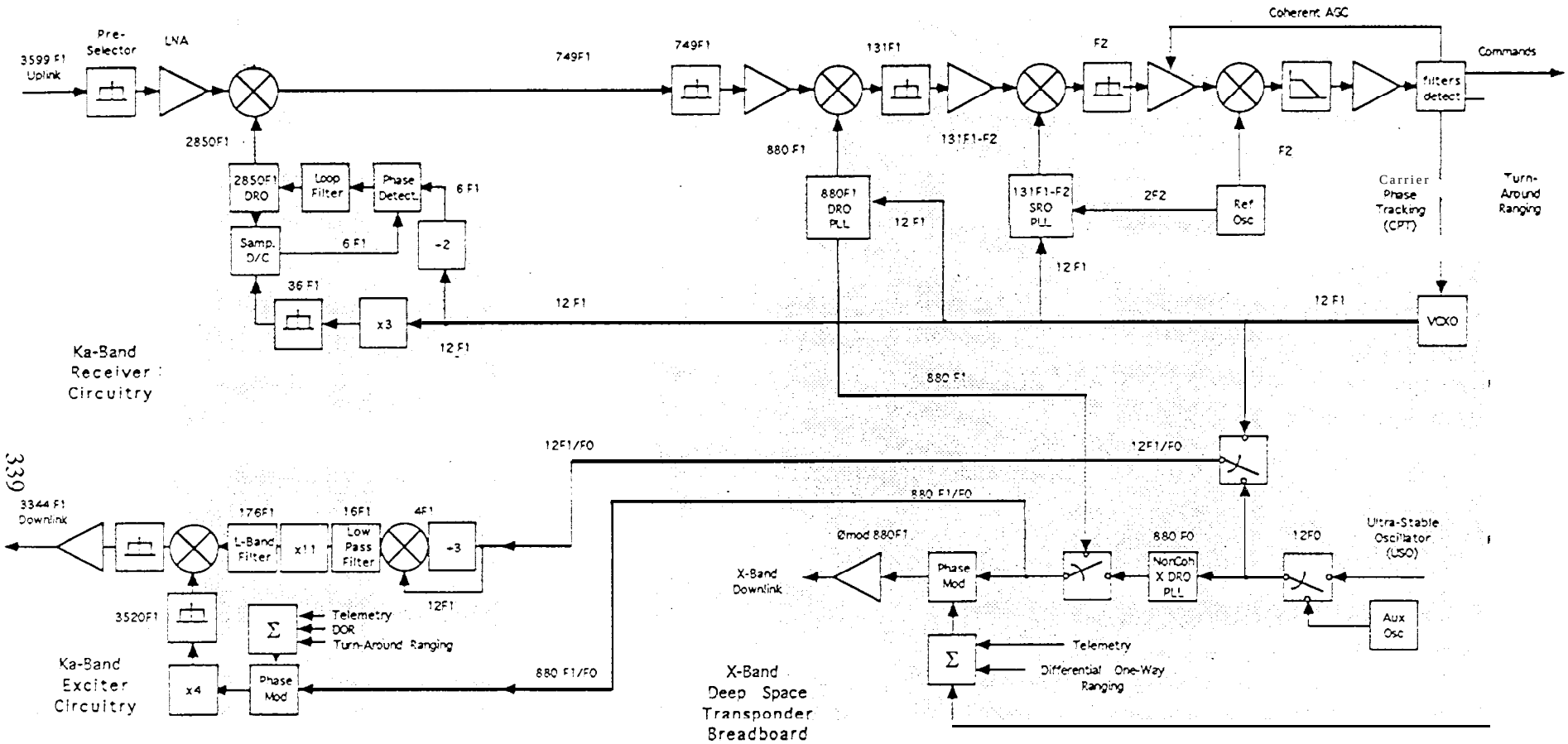

2/25/93